BICYCLE PARKING RACK PLACEMENT

RACK PLACEMENT RULES:

5' from:
Fire hydrant
Crosswalk

4' from:
Loading zone
Bus stop
Bus shelter
Bus bench

Min. 2', Rec. 3' from:
Curb

3' from:
Parking meter
Newspaper rack
US mailbox
Light pole
Sign pole
Driveway
Tree space
Trash can
Utility meter
Manhole
Other street furniture
Other sidewalk obstructions

WALL SETBACKS
For racks set parallel to a wall:
Min. 24", Rec. 36"
For racks set perpendicular to a wall:
Min. 28", Rec. 36"

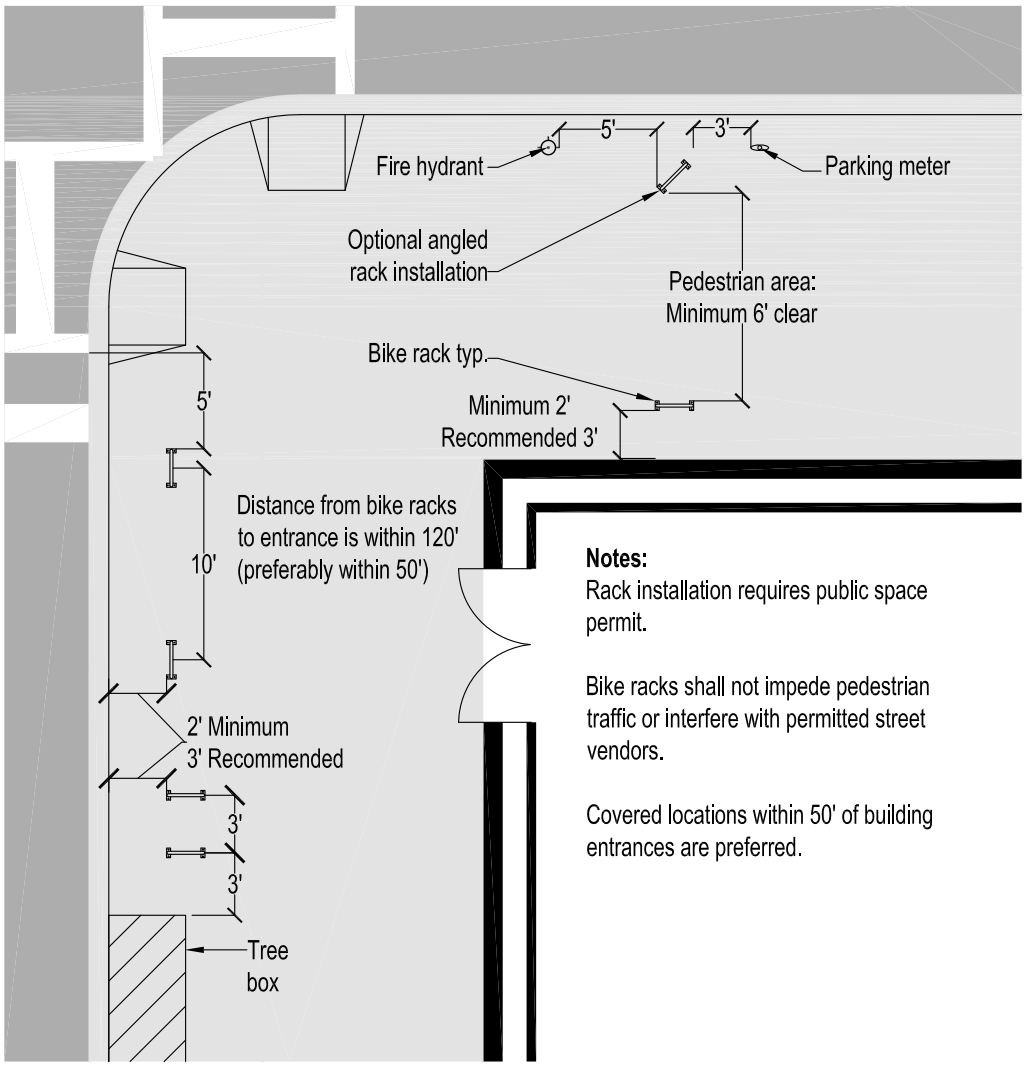

SCALE 1" = 10'

Notes:
Rack installation requires public space permit.

Bike racks shall not impede pedestrian traffic or interfere with permitted street vendors.

Covered locations within 50' of building entrances are preferred.

SIDE VIEW

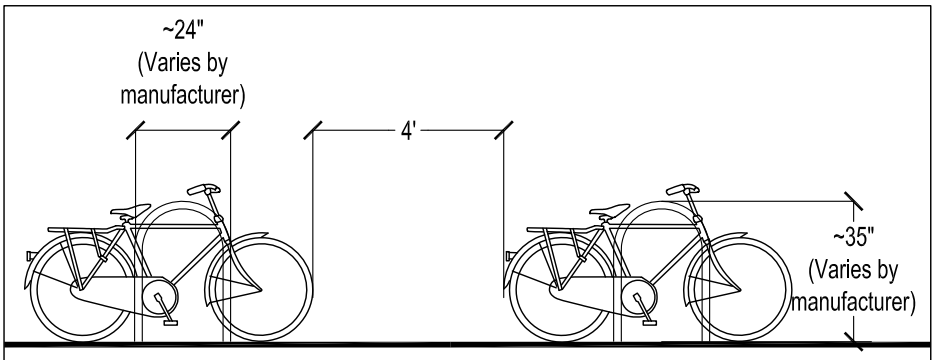

SCALE 1/4" = 1'

SIDE BY SIDE RACKS:

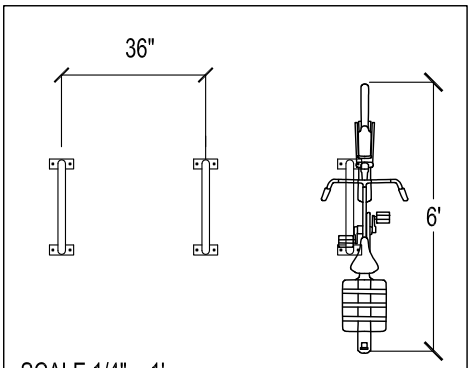

SCALE 1/4" = 1'

Alexandria Department of Transportation and Environmental Services Bicycle and Pedestrian Program	REVISED: February 2013 SCALE: AS NOTED	B