BICYCLE PARKING SHELTER PLACEMENT

SHELTER SETBACKS:

-Existing walls/ streets: 3' Minimum from limit of roof

-Shelter shall comply with all local requirements and guidelines

-All existing utilities shall be located and verified by state and local requirements

-Shelter shall be assembled and installed to manufactures guidelines

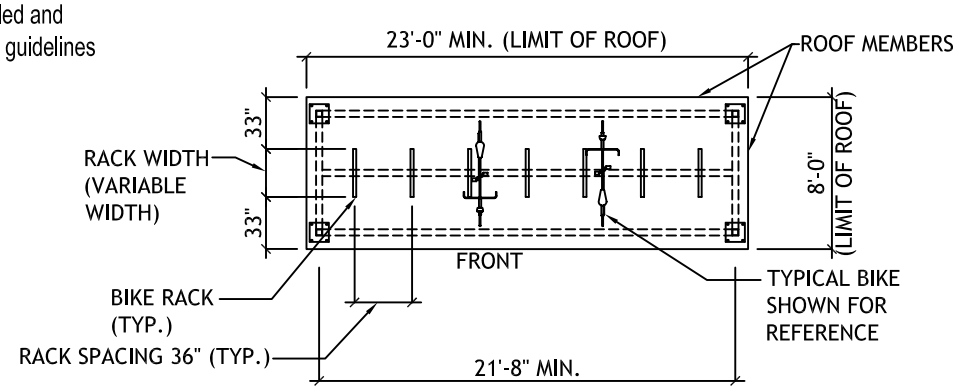

PLAN VIEW
SHELTER PLACEMENT- SCALE 1"=10'-0"

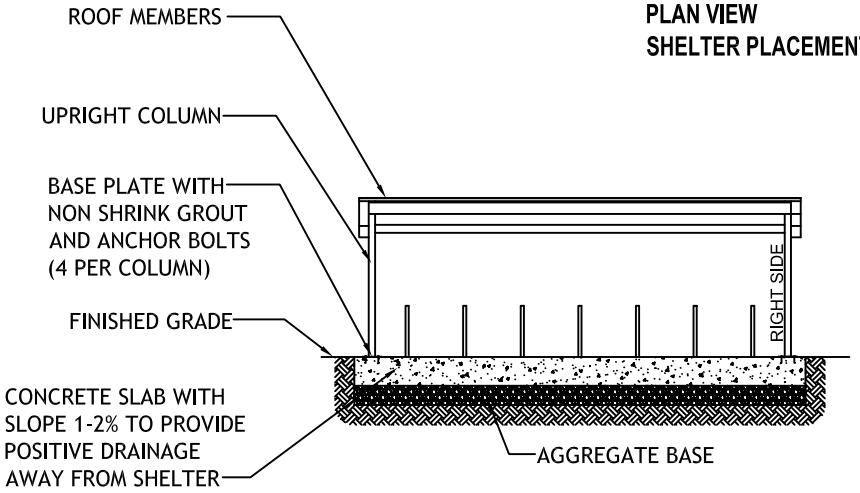

FRONT ELEVATION-SCALE 1"=10'-0"

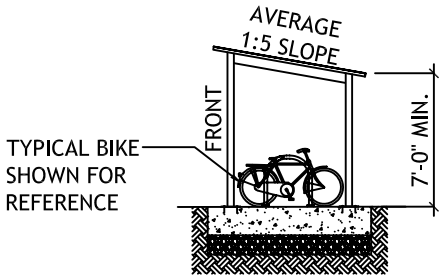

RIGHT SIDE ELEVATION-SCALE 1"=10'-0"

Alexandria Department of Transportation and Environmental Services Bicycle and Pedestrian Program	REVISED: February 2013 SCALE: AS NOTED	E