COMPLETENESS REVIEW

POTOMAC YARD PARK

C I T Y O F A L E X A N D R I A , V I R G I N I A

LOCATION MAP

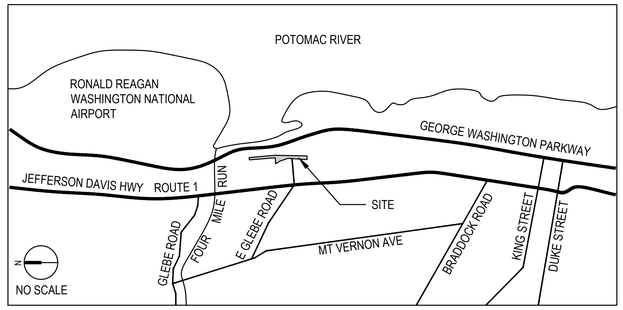

NARRATIVE

THE SITE IS CURRENTLY ZONED CCD#10 AND CONSISTS OF A PUBLIC PARK. THE PROJECT PROPOSES TO REDESIGN/ AMEND THE NORTH END OF POTOMAC YARD PARK FOR CONNECTION TO A NEW METRO STATION. AN INCLINED PLANE IS PROPOSED TO CONNECT THE NEW METRO STATION ENTRY TO THE EXISTING PEDESTRIAN CIRCULATION WITHIN AND SURROUNDING THE PARK.

SPECIAL USE PERMITS, SITE PLAN MODIFICATIONS:

1) DSUP #2006-0013
2) DSUP #2010-0012
3) DSUP #2014-0028
4) DSUP #2016-0004

DESIGN GUIDELINES

1) POTOMAC YARD URBAN DESIGN GUIDELINES, 2007
2) CITY OF ALEXANDRIA LANDSCAPE GUIDELINES, 2007

RESOURCE PROTECTION AREA

PROJECT SITE IS NOT LOCATED WITHIN A RPA BUFFER AREA

ZONING TABULATIONS

ZONING OF THE SITE	CDD#10
EXISTING USE OF SITE	PUBLIC PARK
PROPOSED USE OF SITE	PUBLIC PARK WITH METRO ACCESS
TOTAL PROJECT AREA	3.22 AC
LOT AREA REQUIRED	N/A
LOT AREA PROVIDED	N/A
LOT OPEN SPACE	3.18 AC
DENSITY	N/A
GROSS SQFT OF BUILDINGS	1,613 SF (0.04 AC)
FAR	N/A
BUILDING HEIGHT	TBD - BY OTHERS
GROSS FLOOR AREA	TBD - BY OTHERS
NET FLOOR AREA	TBD - BY OTHERS
GROUND LEVEL OPEN SPACE	3.18 AC
ROOF LEVEL OPEN SPACE	0
TOTAL OPEN SPACE	3.18 AC
BUILDING FINISHED GRADE AVERAGE	37.15
BUILDING HEIGHT AVERAGE	TBD - BY OTHERS
BUILDING SETBACKS	N/A
LOT FRONTAGE REQUIRED	N/A
LOT FRONTAGE PROVIDED	N/A
EXISTING TRIP GENERATION	N/A
PROPOSED TRIP GENERATION	N/A
COMBINED SEWER AREA	NO
TAX MAP	16.04 & 25.02
PARCEL NUMBER	025.04-03-01

SHEET INDEX

L-100 - COVER SHEET
L-101 - CONTEXTUAL PLAN
L-102 - EXISTING CONDITIONS AT SURFACE
L-103 - EXISTING UTILITIES
L-104 - OPEN SPACE CALCULATIONS
L-105 - ENVIRONMENTAL CONDITIONS
L-106 - EXISTING TREE SURVEY
L-107 - CITY NOTES
L-108 - CITY NOTES
L-109 - CITY NOTES
L-200 - MATERIALS PLAN AND ELEVATION
L-201 - GRADING PLAN
L-202 - LAYOUT PLAN
L-203 - PLANTING PLAN
L-204 - LIGHTING AND SIGNAGE PLAN
L-301 - CONCEPT PLAN - SECTIONS
L-501 - PLANTING DETAILS
L-502 - HARDSCAPE DETAILS
L-503 - STAIR AND HANDRAIL DETAILS
L-504 - SITE FURNISHINGS

DISTURBED AREA CALCULATION

TOTAL SITE AREA:	3.22 AC
TOTAL DISTURBED AREA:	2.19 AC

COMPLETE STREETS TABULATION CHART

	NEW	UPGRADED
CROSSWALKS (NUMBER)		
STANDARD	0	0
HIGH VISIBILITY	0	0
CURB RAMPS	0	0
SIDEWALKS (LF)	0	0
BICYCLE PARKING (NUMBER SPACES)		
PUBLIC/VISITOR	0	0
PRIVATE/GARAGE	0	0
BICYCLE PATHS (LF)	0	0
PEDESTRIAN SIGNALS	0	0

NOTE: IMPROVEMENTS TO POTOMAC YARD PARK ARE NOT WITHIN THE RIGHT-OF-WAY

LANDSCAPE ARCHITECT

MICHAEL BAKER INTERNATIONAL
3601 EISENHOWER AVENUE
ALEXANDRIA, VA 22304
ATTN: JOHN C FENNELL, PLA, LEED GA, CLARB
PHONE: 703-236-4744
VA LIC. 826

GEOTECH ENGINEER

GEOCONCEPTS ENGINEERING, INC.
19955 HIGHLAND VISTA DRIVE, SUITE 170
ASHBURN, VA 20147
ATTN: REBECCA L. SMITH-ZAKOWICZ, PG
PHONE: 703-726-8030

SURVEYOR

MERCADO CONSULTANTS, INC.
17830 NEW HAMPSHIRE AVE. SUITE 200
ASHTON, MD 20861
ATTN: THOMAS YOAKUM
PHONE: 240-722-6335

LIGHTING DESIGNER

CM KLING + ASSOCIATES, INC.
1411 KING STREET
ALEXANDRIA, VA 22314
ATTN: DAVID GHATAN / LISHA BROWN
PHONE: 703- 684-6270

IRRIGATION DESIGNER

IRRIGATION RESEARCH AND DESIGN
P.O. BOX 17993
RICHMOND, VA 23226
ATTN: BILL ROGERS
PHONE: 804-640-3223

APPLICANT

CITY OF ALEXANDRIA DEPARTMENT OF
PROJECT IMPLEMENTATION
301 KING STREET, SUITE 3200
ALEXANDRIA, VA 22314
ATTN: MITCH BERNSTEIN
PHONE: 703-746-4036

PROPERTY OWNER

CITY OF ALEXANDRIA
301 KING STREET, SUITE 2100
ALEXANDRIA, VA 22314

UNDERGROUND UTILITIES MAPPING

EDWARDS UTILITY MAPPING CORPORATION
11 MARSH RUN RD.
FREDERICKSBURG, VA 22406
ATTN: DACE EDWARDS
PHONE: 540-737-5141

ARCHAEOLOGY NOTES:
1. THE APPLICANT/DEVELOPER SHALL CALL ALEXANDRIA ARCHAEOLOGY IMMEDIATELY (703-838-4399) IF ANY BURIED STRUCTURAL REMAINS (WALL FOUNDATIONS, WELLS, PRIVIES, CISTERNS, ETC.) OR CONCENTRATIONS OF ARTIFACTS ARE DISCOVERED DURING DEVELOPMENT. WORK MUST CEASE IN THE AREA OF THE DISCOVERY UNTIL A CITY ARCHAEOLOGIST COMES TO THE SITE AND RECORDS THE FINDS.
2. THE APPLICANT/DEVELOPER SHALL NOT ALLOW ANY METAL DETECTION OR ARTIFACT COLLECTION TO BE CONDUCTED ON THE PROPERTY, UNLESS AUTHORIZED BY ALEXANDRIA ARCHAEOLOGY.

APPROVED
SPECIAL USE PERMIT NO. DSUP 2016-0006
DEPARTMENT OF PLANNING & ZONING

DIRECTOR DATE
DEPARTMENT OF TRANSPORTATION & ENVIRONMENTAL SERVICES
SITE PLAN No.

DIRECTOR DATE

CHAIRMAN, PLANNING COMMISSION DATE

DATE RECORDED

INSTRUMENT NO. DEED BOOK NO. PAGE NO.

Michael Baker INTERNATIONAL
3601 EISENHOWER AVENUE
SUITE 600
ALEXANDRIA, VIRGINIA 22310
TEL. 703.960.8800

Project Title
POTOMAC YARD PARK

COMMONWEALTH OF VIRGINIA
JOHN CRAIG FENNELL
Lic. No. 826
LANDSCAPE ARCHITECT

No.	Revision	Date
1.		
2.		
3.		
4.		
5.		
6.		
7.		
8.		

Drawn by: WDU Checked by: JCF
Scale: AS NOTED Date: 26 FEB 2016
Issued for
City of Alexandria Department of Project Implementation

Drawing Title
COVER SHEET

Drawing Number
L-100

Project Number 151053

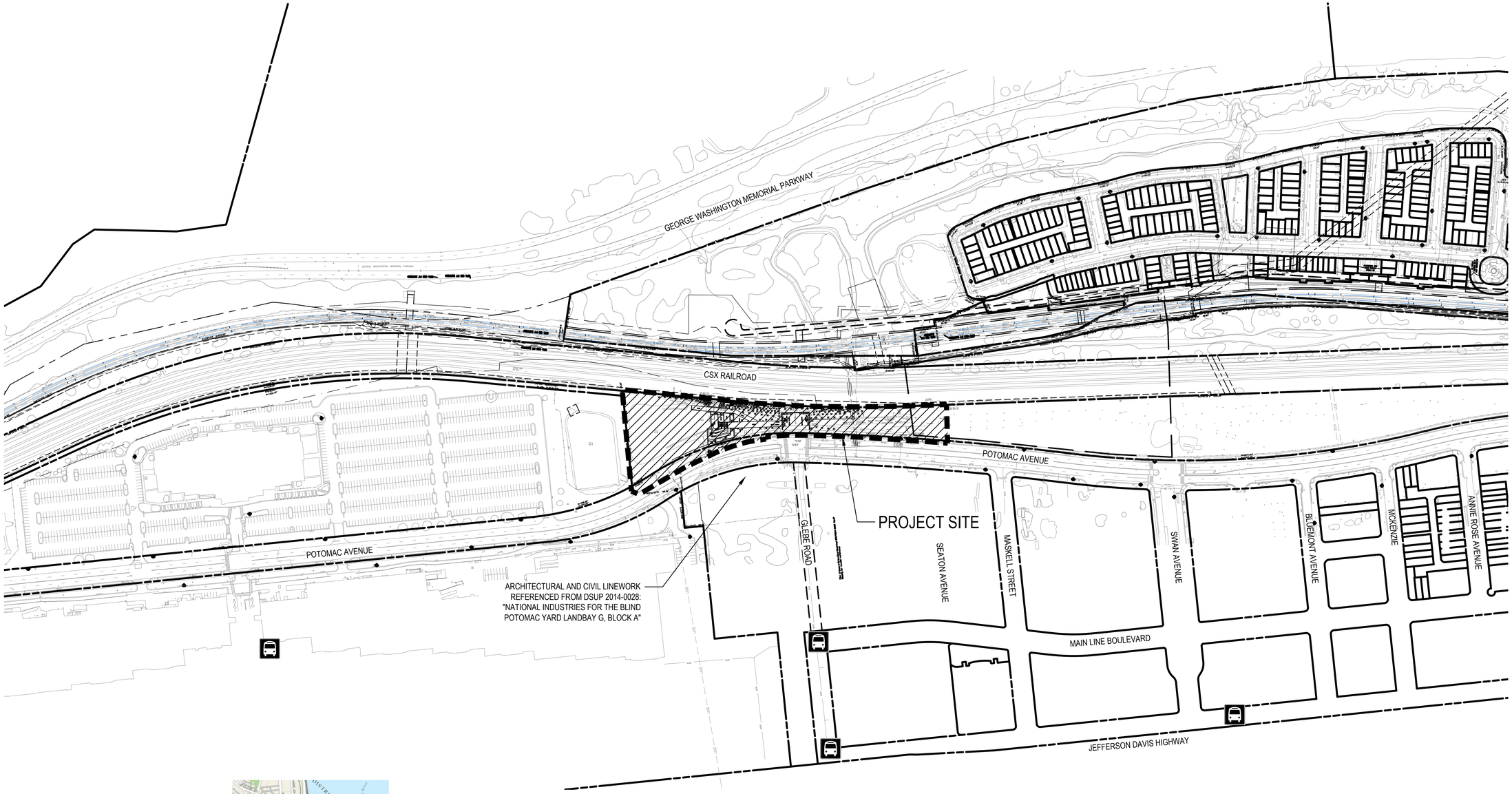

LEGEND

EXISTING RIGHT OF WAY

EXISTING BUS STOP

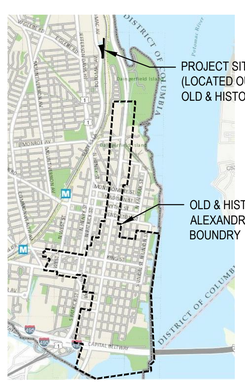

E1 OLD & HISTORIC ALEXANDRIA DISTRICT

SCALE: NO SCALE REF:

150 75 0 150

SCALE: 1"=150'-0"

N

WMATA LDP
COORDINATE SYSTEM

ARCHAEOLOGY NOTES:
1. THE APPLICANT/DEVELOPER SHALL CALL ALEXANDRIA ARCHAEOLOGY IMMEDIATELY (703-838-4399) IF ANY BURIED STRUCTURAL REMAINS (WALL FOUNDATIONS, WELLS, PRIVIES, CISTERNS, ETC.) OR CONCENTRATIONS OF ARTIFACTS ARE DISCOVERED DURING DEVELOPMENT. WORK MUST CEASE IN THE AREA OF THE DISCOVERY UNTIL A CITY ARCHAEOLOGIST COMES TO THE SITE AND RECORDS THE FINDS.
2. THE APPLICANT/DEVELOPER SHALL NOT ALLOW ANY METAL DETECTION OR ARTIFACT COLLECTION TO BE CONDUCTED ON THE PROPERTY, UNLESS AUTHORIZED BY ALEXANDRIA ARCHAEOLOGY.

APPROVED
SPECIAL USE PERMIT NO. DSUP 2016-0006

DEPARTMENT OF PLANNING & ZONING

DIRECTOR DATE

DEPARTMENT OF TRANSPORTATION & ENVIRONMENTAL SERVICES

SITE PLAN No.

DIRECTOR DATE

CHAIRMAN, PLANNING COMMISSION DATE

DATE RECORDED

INSTRUMENT NO. DEED BOOK NO. PAGE NO.

Michael Baker
INTERNATIONAL
3601 EISENHOWER AVENUE
SUITE 600
ALEXANDRIA, VIRGINIA 22310
TEL. 703.960.8800

Project Title

POTOMAC YARD PARK

COMMONWEALTH OF VIRGINIA
JOHN CRAIG FENNELL
Lic. No. 826
LANDSCAPE ARCHITECT

No.	Revision	Date
1.		
2.		
3.		
4.		
5.		
6.		
7.		
8.		

Drawn by: BDC Checked by: JCF

Scale: AS NOTED Date: 26 FEB 2016

Issued for

City of Alexandria Department of Project Implementation

Drawing Title

CONTEXTUAL PLAN

Drawing Number

L-101

Project Number 151053

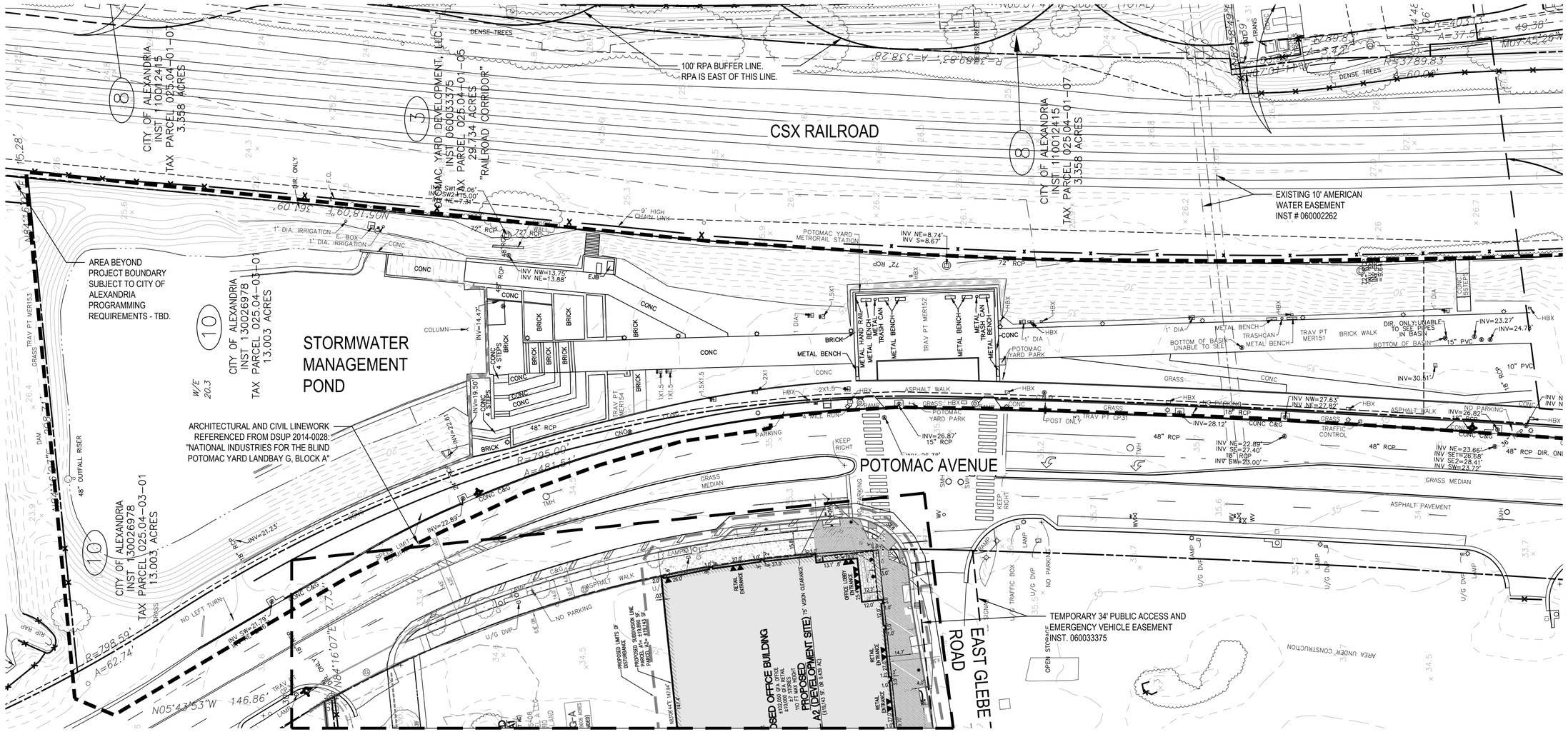

LEGEND

- EXISTING RIGHT OF WAY
- 30 EXISTING CONTOUR
- 30.7 EXISTING SPOT ELEVATION
- EXISTING VEGETATION
- EXISTING FENCE
- PROPOSED LIMIT OF WORK
- U/G DVP POWER HANDHOLE
- U/G VDOT POWER VAULT
- TRAFFIC BOX TRAFFIC CONTROL VAULT
- TRAFFIC SIGNAL BOX GROUND TRAFFIC CONTROL LOCKER
- TRANS ELECTRIC TRANSFORMER
- CTV PED CABLE TV PEDESTAL
- VZN PED TELEPHONE PEDESTAL
- EM POST / EM ELECTRIC METER (POST)
- TMH TELEPHONE MANHOLE
- EMH ELECTRIC MANHOLE
- WMH WATER MANHOLE
- SMH SANITARY MANHOLE
- SDM DRAINAGE MANHOLE
- DI DRAINAGE INLET
- GI GRATE TOP INLET
- CI CURB INLET
- TRAFFIC SIGNAL POLE TRAFFIC SIGNAL POLE (ARMS)
- WALK/DON'T WALK PEDESTRIAN SIGNAL POLE
- SIGNAL LAMP LAMP POST (360° TOP LIGHT)
- ST. LT. STREET LIGHT (LIGHT ON ARM)
- NO PARKING SIGN (WITH DESCRIPTOR)
- MB's MAILBOXES
- AC AIR CONDITIONING UNIT
- CO SANITARY CLEANOUT
- FH FIRE HYDRANT
- WV WATER VALVE
- WM DOMESTIC WATER METER

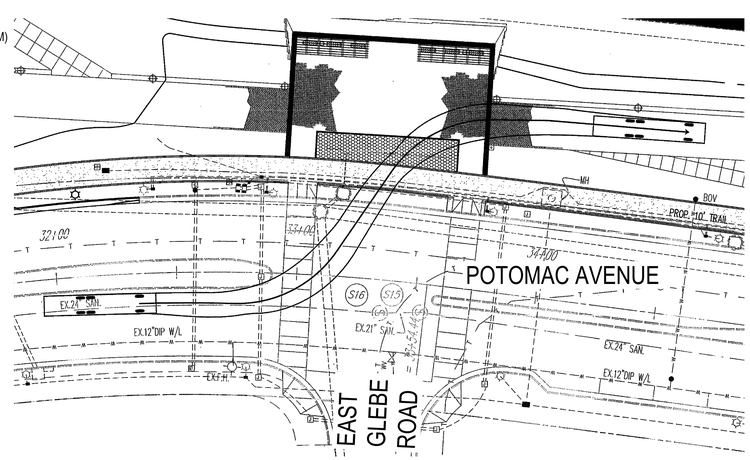

REFERENCED FROM SHEET C-41, "EMERGENCY ACCESS TURNING MOVEMENTS" FROM POTOMAC YARD PARK (DSUP 2006-13 & DSUP 2010-0012)

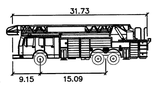

City Fire Truck feet

Width	: 8.14
Track	: 7.61
Lock to Lock Time	: 6.0
Steering Angle	: 41.3

30 15 0 30

SCALE: 1"=30'-0"

N

WMATA LDP COORDINATE SYSTEM

NOTES:

1. FINAL DISTANCES AND BEARINGS TO BE PROVIDED UPON COMPLETION OF SURVEY WORK
2. LIMITS OF CONSTRUCTION LAYDOWN FOR SOUTH ENTRY PAVILION (AS PART OF DSUP 2016-0004) HAVE NOT BEEN DETERMINED AT THE TIME OF THIS SUBMISSION.
3. PROJECT SITE IS NOT LOCATED WITHIN A RPA BUFFER AREA

ARCHAEOLOGY NOTES:

1. THE APPLICANT/DEVELOPER SHALL CALL ALEXANDRIA ARCHAEOLOGY IMMEDIATELY (703-838-4399) IF ANY BURIED STRUCTURAL REMAINS (WALL FOUNDATIONS, WELLS, PRIVIES, CISTERNS, ETC.) OR CONCENTRATIONS OF ARTIFACTS ARE DISCOVERED DURING DEVELOPMENT. WORK MUST CEASE IN THE AREA OF THE DISCOVERY UNTIL A CITY ARCHAEOLOGIST COMES TO THE SITE AND RECORDS THE FINDS.
2. THE APPLICANT/DEVELOPER SHALL NOT ALLOW ANY METAL DETECTION OR ARTIFACT COLLECTION TO BE CONDUCTED ON THE PROPERTY, UNLESS AUTHORIZED BY ALEXANDRIA ARCHAEOLOGY.

APPROVED
SPECIAL USE PERMIT NO. DSUP 2016-0006
DEPARTMENT OF PLANNING & ZONING

DIRECTOR DATE

DEPARTMENT OF TRANSPORTATION & ENVIRONMENTAL SERVICES
SITE PLAN No.

DIRECTOR DATE

CHAIRMAN, PLANNING COMMISSION DATE

DATE RECORDED

INSTRUMENT NO. DEED BOOK NO. PAGE NO.

Michael Baker INTERNATIONAL
3601 EISENHOWER AVENUE
SUITE 600
ALEXANDRIA, VIRGINIA 22310
TEL. 703.960.8800

Project Title

POTOMAC YARD PARK

COMMONWEALTH OF VIRGINIA
JOHN CRAIG FENNELL
Lic. No. 926
LANDSCAPE ARCHITECT

No.	Revision	Date
1.		
2.		
3.		
4.		
5.		
6.		
7.		
8.		

Drawn by: BDC Checked by: JCF
Scale: AS NOTED Date: 26 FEB 2016

Issued for

City of Alexandria Department of Project Implementation

Drawing Title

EXISTING CONDITIONS AT SURFACE

Drawing Number

L-102

Project Number 151053

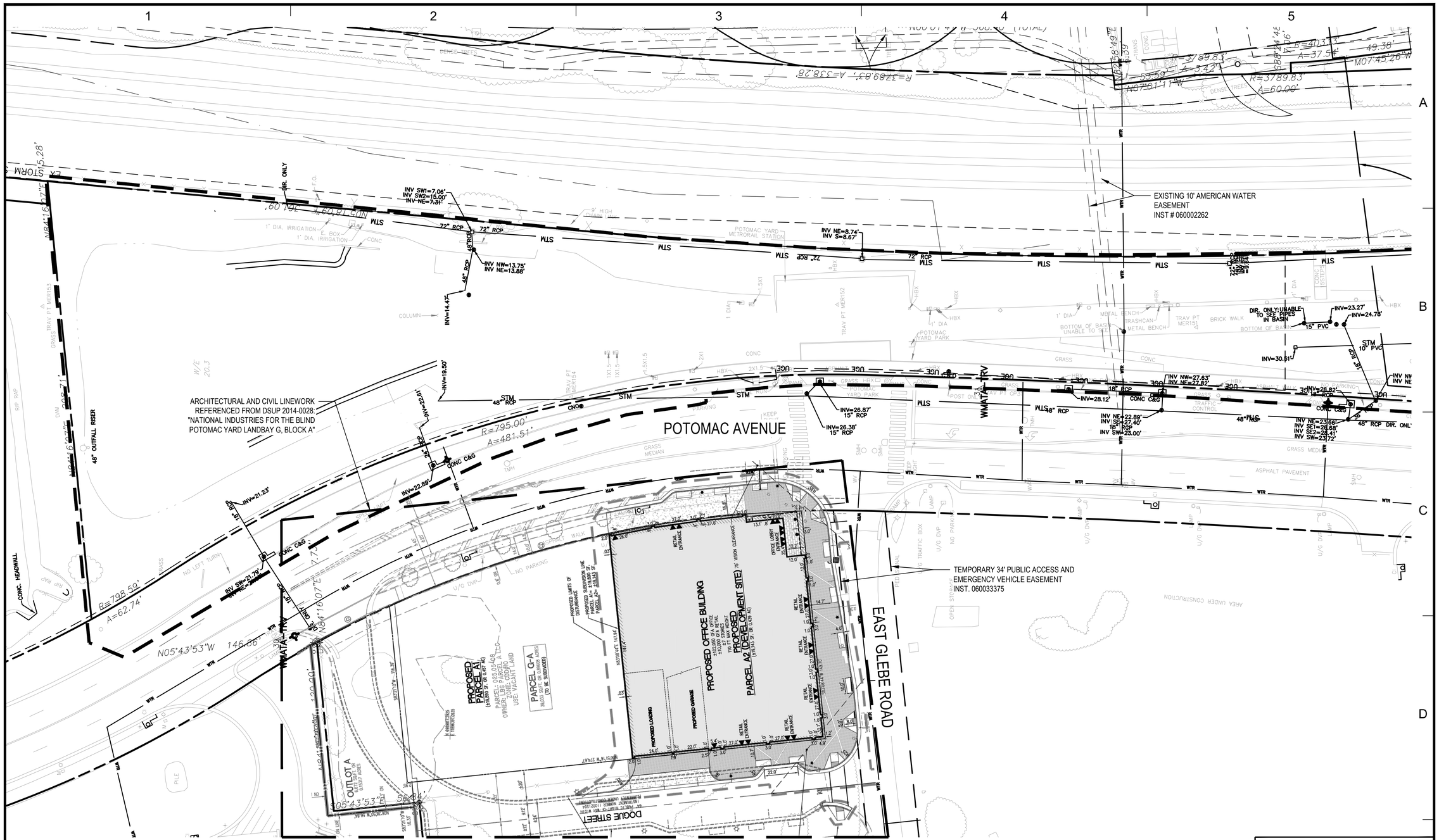

LEGEND

EXISTING RIGHT OF WAY	EXISTING FENCE
PROPOSED LIMIT OF WORK	
WTR — EXISTING WATER LINE	
SAN — EXISTING SANITARY SEWER	
UGE — EXISTING ELECTRIC LINE	
STM — EXISTING STORM SEWER	

30 15 0 30

SCALE: 1"=30'-0"

N

WMATA LDP COORDINATE SYSTEM

ARCHAEOLOGY NOTES:

1. THE APPLICANT/DEVELOPER SHALL CALL ALEXANDRIA ARCHAEOLOGY IMMEDIATELY (703-838-4399) IF ANY BURIED STRUCTURAL REMAINS (WALL FOUNDATIONS, WELLS, PRIVIES, CISTERNS, ETC.) OR CONCENTRATIONS OF ARTIFACTS ARE DISCOVERED DURING DEVELOPMENT. WORK MUST CEASE IN THE AREA OF THE DISCOVERY UNTIL A CITY ARCHAEOLOGIST COMES TO THE SITE AND RECORDS THE FINDS.
2. THE APPLICANT/DEVELOPER SHALL NOT ALLOW ANY METAL DETECTION OR ARTIFACT COLLECTION TO BE CONDUCTED ON THE PROPERTY, UNLESS AUTHORIZED BY ALEXANDRIA ARCHAEOLOGY.

APPROVED
SPECIAL USE PERMIT NO. DSUP 2016-0006

DEPARTMENT OF PLANNING & ZONING

DIRECTOR DATE

DEPARTMENT OF TRANSPORTATION & ENVIRONMENTAL SERVICES

SITE PLAN No. _____

DIRECTOR DATE

CHAIRMAN, PLANNING COMMISSION DATE

DATE RECORDED

INSTRUMENT NO. DEED BOOK NO. PAGE NO.

Michael Baker INTERNATIONAL
3601 EISENHOWER AVENUE
SUITE 600
ALEXANDRIA, VIRGINIA 22310
TEL. 703.960.8800

Project Title

POTOMAC YARD PARK

COMMONWEALTH OF VIRGINIA
JOHN CRAIG FENNELL
Lic. No. 926
LANDSCAPE ARCHITECT

No.	Revision	Date
1.		
2.		
3.		
4.		
5.		
6.		
7.		
8.		

Drawn by: BDC Checked by: JCF

Scale: AS NOTED Date: 26 FEB 2016

Issued for

City of Alexandria Department of Project Implementation

Drawing Title

EXISTING UTILITIES

Drawing Number

L-103

Project Number 151053

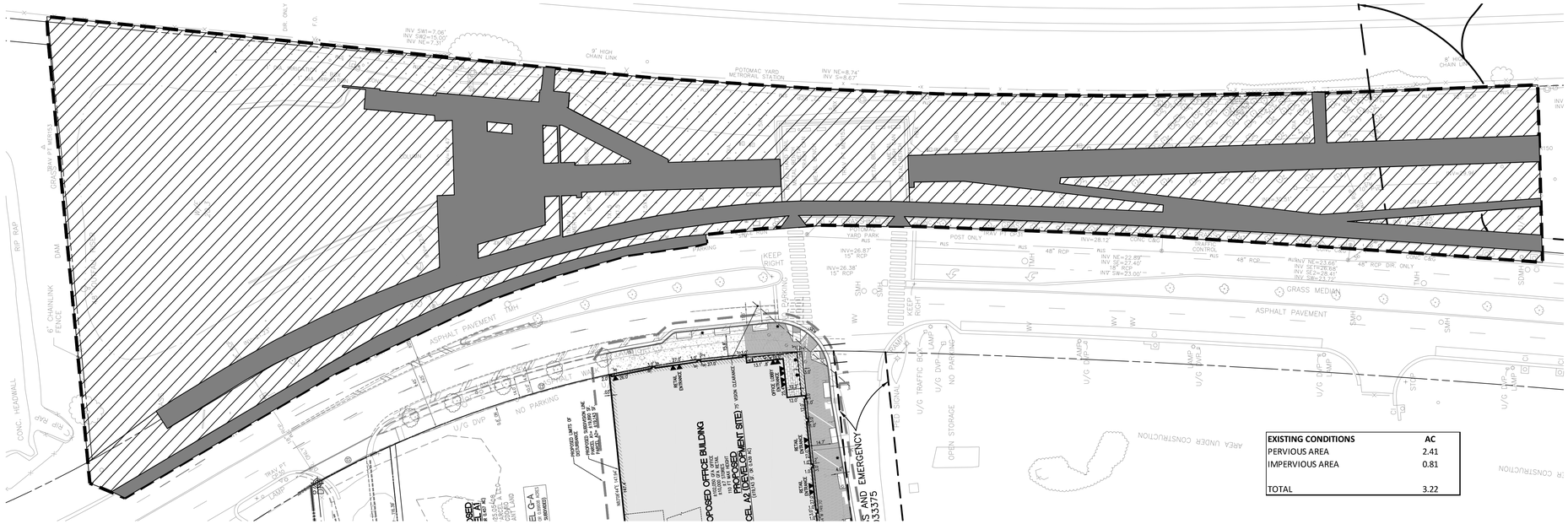

LEGEND

PERVIOUS AREA

IMPERVIOUS AREA

EXISTING CONDITIONS	AC
PERVIOUS AREA	2.41
IMPERVIOUS AREA	0.81
TOTAL	3.22

1 EXISTING PERVIOUS AND IMPERVIOUS CALCULATIONS

SCALE: 1"=40'-0" REF: L-104

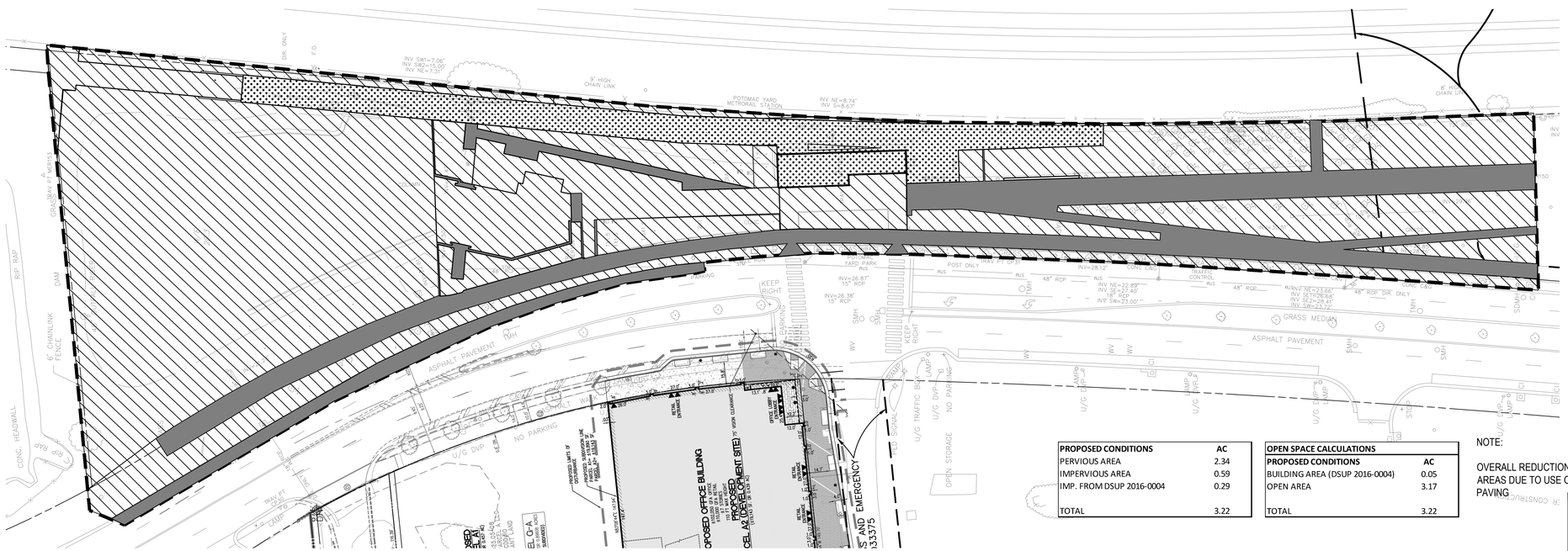

LEGEND

PERVIOUS AREA

IMPERVIOUS AREA

IMPERVIOUS AREA FROM DSUP 2016-0004

PROPOSED CONDITIONS	AC
PERVIOUS AREA	2.34
IMPERVIOUS AREA	0.59
IMP. FROM DSUP 2016-0004	0.29
TOTAL	3.22

OPEN SPACE CALCULATIONS	
PROPOSED CONDITIONS	AC
BUILDING AREA (DSUP 2016-0004)	0.05
OPEN AREA	3.17
TOTAL	3.22

NOTE:

OVERALL REDUCTION IN IMPERVIOUS AREAS DUE TO USE OF PERMEABLE PAVING

2 PROPOSED PERVIOUS AND IMPERVIOUS CALCULATIONS

SCALE: 1"=40'-0" REF: L-104

ARCHAEOLOGY NOTES:

1. THE APPLICANT/DEVELOPER SHALL CALL ALEXANDRIA ARCHAEOLOGY IMMEDIATELY (703-838-4399) IF ANY BURIED STRUCTURAL REMAINS (WALL FOUNDATIONS, WELLS, PRIVIES, CISTERNS, ETC.) OR CONCENTRATIONS OF ARTIFACTS ARE DISCOVERED DURING DEVELOPMENT. WORK MUST CEASE IN THE AREA OF THE DISCOVERY UNTIL A CITY ARCHAEOLOGIST COMES TO THE SITE AND RECORDS THE FINDS.
2. THE APPLICANT/DEVELOPER SHALL NOT ALLOW ANY METAL DETECTION OR ARTIFACT COLLECTION TO BE CONDUCTED ON THE PROPERTY, UNLESS AUTHORIZED BY ALEXANDRIA ARCHAEOLOGY.

APPROVED
SPECIAL USE PERMIT NO. DSUP 2016-0006
DEPARTMENT OF PLANNING & ZONING

DIRECTOR DATE

DEPARTMENT OF TRANSPORTATION & ENVIRONMENTAL SERVICES
SITE PLAN No.

DIRECTOR DATE

CHAIRMAN, PLANNING COMMISSION DATE

DATE RECORDED

INSTRUMENT NO. DEED BOOK NO. PAGE NO.

Michael Baker INTERNATIONAL
3601 EISENHOWER AVENUE
SUITE 600
ALEXANDRIA, VIRGINIA 22310
TEL. 703.960.8800

Project Title

POTOMAC YARD PARK

COMMONWEALTH OF VIRGINIA
JOHN CRAIG FENNELL
Lic. No. 826
LANDSCAPE ARCHITECT

No.	Revision	Date
1.		
2.		
3.		
4.		
5.		
6.		
7.		
8.		

Drawn by: BDC Checked by: JCF

Scale: AS NOTED Date: 26 FEB 2016

Issued for

City of Alexandria Department of Project Implementation

Drawing Title

OPEN SPACE CALCULATIONS

Drawing Number

L-104

Project Number 151053

SOIL MANAGEMENT

THE SITE IS COMPOSED OF GRIST MILL SANDY LOAM AS INDICATED ON THE U.S. NATURAL RESOURCES CONSERVATION SERVICE WEB SOIL SURVEY. HYDROLOGIC SOIL GROUP C.
SOIL SURVEY AREA DATA: VERSION 6, DEC. 13, 2013.

THE PROJECT SITE IS LOCATED WITHIN THE NORTHERN END OF POTOMAC YARD PARK (LANDBAY K). THE SITE HISTORICALLY WAS A RAILROAD YARD IN THE 1900S AND DECOMMISSIONED THROUGH 1989-1993. THERE HAS BEEN SEVERAL ENVIRONMENTAL STUDIES COMPLETED FOR THE SITE, TO INCLUDE:

1) EXTENT OF CONTAMINATION STUDY, POTOMAC YARD, ALEXANDRIA, VIRGINIA. ENVIRONMENTAL TECHNOLOGY OF NORTH AMERICA. MAY 24, 1995.

2) HUMAN HEALTH RISK ASSESSMENT AND ON-SITE ECOLOGICAL RISK ASSESSMENT, POTOMAC YARDS SITE, ALEXANDRA, VIRGINIA. THE WEINBERG GROUP, INC. OCTOBER 13, 1995.

3) SOIL CHARACTERIZATION AND MANAGEMENT PLAN, POTOMAC YARD - ARLINGTON SOUTH TRACT, ARLINGTON, VIRGINIA. EARTH TECH. JULY 8, 2003.

4) ENVIRONMENTAL INVESTIGATION, POTOMAC YARDS, LAND BAY K, ALEXANDRIA, VIRGINIA. ECS MID-ATLANTIC, LLC. JUNE 9, 2010.

SOIL MANAGEMENT, POTENTIAL EXPOSURE AND CONTROLS

POTENTIAL EXPOSURE PATHWAYS ARE ASSOCIATED WITH CONSTRUCTION WORKERS BOTH DURING INITIAL DEVELOPMENT AND TO A LESSER EXTENT IN THE EVENT FUTURE SERVICING REQUIRES EXCAVATION OF UTILITY LINES. RISK SCENARIOS FOR CONSTRUCTION WORKERS BOTH SHORT (DEVELOPMENT) AND LONG TERM (FUTURE SERVICING) ARE EXPECTED TO INVOLVE EXPOSURE PATHWAYS OF INHALATION FROM FUGITIVE DUST AND INCIDENTAL INGESTION OF SOIL PARTICLES.

FOR THE INSTALLATION OF THE UTILITY CORRIDORS IN AREAS WHERE IMPACTED SOILS ARE ENCOUNTERED, IT IS RECOMMENDED THAT THE TRENCHES BE OVER EXCAVATED AT LEAST TWO FEET ON ALL SIDES. PRIOR TO INSTALLATION OF THE UTILITY, A LAYER OF CLEAN FILL SHOULD BE PLACED AT THE BASE OF THE EXCAVATION (I.E. REPLACE THE OVER EXCAVATED MATERIAL). IF THE EXCAVATION FOR THE UTILITIES IS IN NON-IMPACTED MATERIAL, THEN OVER EXCAVATION MAY NOT BE NECESSARY; HOWEVER, THE UTILITY EXCAVATION SHOULD BE OBSERVED BY A COMPETENT ENVIRONMENTAL PROFESSIONAL PRIOR TO FINAL UTILITY PLACEMENT TO VERIFY THE CONDITION OF THE MATERIAL REMAINING IN THE TRENCH. IF NECESSARY, THE EXCAVATED MATERIAL SHOULD BE SCREENED FOR EVIDENCE OF ENVIRONMENTAL CONTAMINATION BASED ON ELEVATED PHOTOIONIZATION DETECTOR (PID) READINGS, OR OTHER VISUAL OR OLFACTORY EVIDENCE OF CONTAMINATION (I.E. STAINING, ODORS, ETC.) IN AREAS WHERE OBVIOUS CONTAMINATION IS PRESENT, FULL-TIME SCREENING MAY NOT BE REQUIRED. ONCE THE UTILITY IS PLACED IN THE EXCAVATION, THE UTILITY TRENCH SHOULD BE BACKFILLED WITH CLEAN FILL (I.E. NON-CONTAMINATED MATERIAL).

CONTAMINATED MATERIAL PRODUCED AS A RESULT OF THE UTILITY INSTALLATION OR OTHER EXCAVATION SHOULD BE DISPOSED OF IN ACCORDANCE WITH APPLICABLE VIRGINIA DEPARTMENT OF ENVIRONMENTAL QUALITY (VDEQ) WASTE MANAGEMENT REGULATIONS. BASED ON THE CONTAMINANTS DETECTED AT THE SITE, IMPACTED MATERIALS SHOULD BE TAKEN TO A LINED LANDFILL (OR OTHER APPROPRIATE DISPOSAL/TREATMENT FACILITY) CAPABLE OF HANDLING NON-HAZARDOUS LEVELS OF HEAVY METALS AND TPH. EXCAVATED CONTAMINATED MATERIALS SHOULD BE LOADED DIRECTLY ONTO TRUCKS, REMOVED FROM THE SITE AND DISPOSED APPROPRIATELY. IF NECESSARY, THIS MATERIAL SHOULD BE STOCKPILED ON THE SITE FOR THE PERIOD OF TIME IT TAKES TO EXCAVATE AN APPROPRIATE LENGTH OF TRENCH AND HAVE IT LOADED ONTO TRUCKS, ONLY. CONTAMINATED SOIL SHOULD NOT BE STOCKPILED ON SITE FOR A PERIOD LONGER THAN ONE WORKING DAY.

DURING THE DEVELOPMENT PROCESS CARE SHOULD BE TAKEN TO REDUCE WORKER EXPOSURE POTENTIAL AND ENSURE THAT THE MATERIAL IS CONTAINED ON THE SITE UNTIL ITS FINAL PLACEMENT IS COMPLETE. AS SUCH, ENGINEERING CONTROLS SHOULD BE INSTITUTED SO THAT NO VISIBLE EMISSIONS OR DUST IS PRODUCED DURING THE HANDLING PROCESS. THIS CAN BE ACCOMPLISHED BY THE USE OF WATER SPRAYERS OR TRUCKS AS NEEDED DURING SITE GRADING AND EXCAVATION. IN ADDITION TO THESE CONTROLS, ANY STOCKPILED MATERIAL SHOULD BE COVERED WITH PLASTIC OR OTHERWISE STABILIZED TO INHIBIT RUNOFF, VISIBLE EMISSIONS AND DUST.

WORKERS SHOULD NOT BE ALLOWED TO EAT, SMOKE OR DRINK IN THE AREAS OF THE SITE AT WHICH IMPACTED SOILS ARE EXPOSED. A DESIGNATED WORKER "BREAK" AREA SHOULD BE ESTABLISHED AS NEEDED AT THE SITE. WORKERS SHOULD BE REQUIRED TO WASH ANY EXPOSED AREAS REGULARLY DURING THE WORKDAY AND AT A MINIMUM PRIOR TO EATING, SMOKING OR DRINKING AND UPON LEAVING THE SITE. ALSO WORK CLOTHES SHOULD BE CHANGED PRIOR TO EXITING THE SITE. BASED ON THE KNOWN ENVIRONMENTAL INFORMATION FOR THE SITE IT DOES NOT APPEAR THAT PERSONAL PROTECTIVE EQUIPMENT (PPE) ABOVE LEVEL D (I.E. NORMAL WORK CLOTHES TO INCLUDE WORK GLOVES. SAFETY GLASSES, HARDHAT, AND SAFETY SHOES) WILL BE NEEDED WHEN WORKING AT THE SITE.

ONCE THE DEVELOPMENT OF THE SITE IS COMPLETE, THE SITE WILL BE CAPPED WITH CONCRETE, BRICK PAVING, ASPHALT PAVING OR A MINIMUM OF TWO FEET OF CLEAN (I.E. NON-CONTAMINATED) SOIL, OR SOME COMBINATION THERE OF, DEPENDING UPON ITS FINAL DISPOSITION AT THE SITE. THE CLEAN FILL MATERIAL MAY BE IMPORTED FROM OFF SITE SOURCES OR TAKEN FROM THE EXISTING STOCKPILE OF SOILS IMPORTED FROM EXCAVATIONS ON THE NORTHERN PORTION THE POTOMAC YARDS SITE. CINDER BALLAST MATERIALS WILL NOT BE USED AS FILL MATERIAL, AND WILL BE REMOVED FROM THE SITE WHERE ENCOUNTERED. IN AREAS OF THE SITE WHERE NET CUT IS REQUIRED, THE AREAS SHOULD BE OVER-EXCAVATED TO A MINIMUM DEPTH OF TWO FEET TO ENSURE THE REMOVAL OF CONTAMINATED MATERIALS, AND THE MATERIAL REPLACED WITH CLEAN, COMPACTED FILL MATERIALS. THIS FORM OF ENCAPSULATION WILL EFFECTIVELY ELIMINATE THE LONG-TERM EXPOSURE POTENTIAL BY ELIMINATING THE POTENTIAL FOR INGESTION AND INHALATION OF THE IMPACTED MATERIAL. PLEASE REFER TO THE 1995 WEINBERG GROUP, INC RISK ASSESSMENT FOR DETAILS RELATED TO THE SPECIFIC EXPOSURE ROUTES AND THEIR ELIMINATION AS A RESULT OF DEVELOPMENT AND CAPPING OF THE SITE. IN AREAS THAT WILL NOT BE CAPPED BY CONCRETE OR ASPHALT, OR WHERE SOILS FROM OTHER PORTION OF THE POTOMAC YARDS PROPERTY ARE USED AS UNCAPPED FILL, A LIMITED PROGRAM OF CONFIRMATORY TESTING SHOULD BE PERFORMED TO ENSURE THAT THE SOILS WILL POSE NO SIGNIFICANT RISK TO FUTURE OCCUPANTS OF THE SITE. ECS HAS COLLECTED DAILY CONFIRMATORY SAMPLES FROM THE MATERIALS IMPORTED TO THE STOCK PILE AREA FROM THE NORTHERN PORTION OF THE POTOMAC YARDS SITE, AND ANY SOILS FOUND TO CONTAIN TPH GREATER THAN 50 PARTS PER MILLION WERE REMOVED AND SENT TO A LINED LANDFILL. THE FINAL CONFIRMATORY TESTING PROGRAM WILL BE PERFORMED IN ADDITION TO THE CONFIRMATORY TESTING THAT HAS ALREADY BEEN PERFORMED AS A FINAL SAFEGUARD.

REFERENCE:
FINAL 100% ISSUE OF POTOMAC YARD PARK, MARCH 14, 2014, PAGE EX-200
LAND PLANNING AND DESIGN ASSOCIATES
ECS MID-ATLANTIC, LLC, 703-471-8400

SOIL CONTAMINANTS

BASED ON THE 2010 ECS ENVIRONMENTAL INVESTIGATION, THE TABLE ON THE FOLLOWING PAGE BREAKS DOWN THE CONTAMINANTS PRESENTS IN SOILS BENEATH THE SITE FOR LANDBAY K, ALONG WITH THEIR RESPECTIVE DETECTED CONCENTRATIONS. CONTAMINANTS THAT WERE NOT DETECTED ARE NOT INCLUDED IN THESE TABLES.

REFERENCE:
FINAL 100% ISSUE OF POTOMAC YARD PARK, MARCH 14, 2014, PAGE EX-200
LAND PLANNING AND DESIGN ASSOCIATES
ECS MID-ATLANTIC, LLC, 703-471-8400

LANDBAY K	70 Samples	
Contaminant	Highest Detected Concentration	Mean Concentration
Arsenic	650 ppm	171.2 ppm
Barium	310 ppm	67.3 ppm
Chromium	27 ppm	13.9 ppm
Lead	110 ppm	43.5 ppm
Silver	250 ppm	114.6 ppm
TPH DRO	7,100 ppm	777.8 ppm
TPH GRO	1,500 ppm	1,210 ppm
Benzene	3 ppb	3 ppb
2-Butanone	12 ppb	12 ppb
Ethylbenzene	27 ppb	15 ppb
Isopropylbenzene	92 ppb	80.5 ppb
4-Isopropyltoluene	370 ppb	199 ppb
Naphthalene	200 ppb	200 ppb
n-Propylbenzene	180 ppb	124.5 ppb
1,2,4-Trimethylbenzene	350 ppb	180.5 ppb
1,3,5-Trimethylbenzene	220 ppb	114 ppb
Total Xylenes	39 ppb	21 ppb

ARCHAEOLOGY

1) ALL REQUIRED ARCHAEOLOGICAL PRESERVATION MEASURES SHALL BE COMPLETED PRIOR TO GROUND-DISTURBING ACTIVITIES (SUCH AS CORING, GRADING, FILLING, VEGETATION REMOVAL, UNDERGROUNDING UTILITIES, PILE DRIVING, LANDSCAPING AND OTHER EXCAVATIONS AS DEFINED IN SECTION 2-151 OF THE ZONING ORDINANCE) OR A RESOURCE MANAGEMENT PLAN MUST BE IN PLACE TO PRESERVE AND/OR RECOVER SIGNIFICANT RESOURCES IN CONCERT WITH CONSTRUCTION ACTIVITIES. TO CONFIRM, CALL ALEXANDRIA ARCHAEOLOGY AT (703) 838-4399.

2) CALL ALEXANDRIA ARCHAEOLOGY (703/838-4399) TWO WEEKS BEFORE THE STARTING DATE OF ANY GROUND DISTURBANCE SO THAT AN INSPECTION OR MONITORING SCHEDULE FOR CITY ARCHAEOLOGISTS CAN BE ARRANGED.

3) THE APPLICANT SHALL CALL ALEXANDRIA ARCHAEOLOGY IMMEDIATELY (703-838-4399) IF ANY BURIED STRUCTURAL REMAINS (WALL FOUNDATIONS, WELLS, PRIVIES, CISTERNS, ETC.) OR CONCENTRATIONS OF ARTIFACTS ARE DISCOVERED DURING DEVELOPMENT. WORK MUST CEASE IN THE AREA OF THE DISCOVERY UNTIL A CITY ARCHAEOLOGIST COMES TO THE SITE AND RECORDS THE FINDS.

4) THE APPLICANT SHALL NOT ALLOW ANY METAL DETECTION AND/OR ARTIFACT COLLECTION TO BE CONDUCTED ON THE PROPERTY, UNLESS AUTHORIZED BY ALEXANDRIA ARCHAEOLOGY. FAILURE TO COMPLY SHALL RESULT IN PROJECT DELAYS.

5) THIS PROJECT IS AN AMENDMENT TO THE POTOMAC YARD PARK (DSUP 2006-0013 & DSUP 2010-0012) AND HAS ALREADY BEEN INTERPRETED BY ARCHEOLOGY.

RESOURCE PROTECTION AREAS

1) THE POTOMAC YARD PARK (AMENDMENT) SITE IS NOT WITHIN THE RPA BUFFER, ACCORDING TO THE CITY OF ALEXANDRIA RPA BUFFER MAP (ADOPTED BY CITY COUNCIL JUNE 12, 2004).

2) THE POTOMAC YARD PARK (AMENDMENT) SITE IS NOT WITHIN THE RPA BUFFER, ACCORDING TO THE CITY OF ALEXANDRIA 50 FOOT BUFFER MAP (ADOPTED BY CITY COUNCIL JUNE 12, 2004).

STORM WATER MANAGEMENT

THE REDESIGN OF POTOMAC YARD PARK WILL MINIMIZE IMPERVIOUS AREAS AS COMPARED TO EXISTING CONDITIONS.

THE STORMWATER COLLECTION SYSTEM IS LOCATED WITHIN THE POTOMAC RIVER WATERSHED. ALL ON-SITE STORMWATER CURB INLETS AND PUBLIC CURB INLETS WITHIN 50 FEET OF THE PROPERTY LINE SHALL BE DULY MARKED USING STANDARD CITY MARKERS. THE CURRENT SITE DRAINAGE PATTERN FLOWS OVERLAND INTO STORMWATER MANAGEMENT POND P-2 (THE SOUTH POND). THE POND DISCHARGES THROUGH A 48" RCP THEN FLOWS INTO A 72" RCP PIPE PRIOR TO DISCHARGING INTO THE POTOMAC RIVER.

THERE ARE NO KNOWN TIDAL WETLANDS, TIDAL SHORES, TRIBUTARY STREAMS, FLOODPLAINS, CONNECTED TIDAL WETLANDS, HIGHLY ERODIBLE / PERMEABLE SOILS OR BUFFER AREAS ASSOCIATED WITH SHORES, STREAM OR WETLANDS LOCATED ON THIS SITE. AS DEFINED BY NRCS, THE PROJECT SITE IS ALMOST ENTIRELY GRIST MILL SANDY LOAM, 0 TO 25 PERCENT SLOPES WHICH IS CLASSIFIED AS HYDROLOGIC SOIL GROUP C.

THE PROJECT SHALL COMPLY WITH THE MORE STRINGENT REQUIREMENTS BETWEEN THE STATE REDUCTION REQUIREMENTS USING THE VIRGINIA RUNOFF REDUCTION METHOD (VRRM), THE CITY OF ALEXANDRIA MASTER STORMWATER QUALITY PLAN AND ZONING ORDINANCE ARTICLE XIII, AND THE REQUIREMENTS OF COORDINATED DEVELOPMENT DISTRICT (CDD) #10.

PER THE REQUIREMENTS OF THE CITY OF ALEXANDRIA CDD#10, THE APPLICANT SHALL COMPLY WITH THE PEAK FLOW REQUIREMENTS AND PREPARE A STORMWATER MANAGEMENT PLAN SO THAT FROM THE SITE, THE POST DEVELOPMENT PEAK RUNOFF RATE FROM A TWO YEAR STORM AND A 10-YEAR STORM, CONSIDERED INDIVIDUALLY, SHALL REDUCE THEIR RESPECTIVE PREDEVELOPMENT RATES BY 30%. THIS REQUIREMENT IS STRICTER THAN THE ALEXANDRIA ZONING ORDINANCE WHICH DOES NOT REQUIRE A REDUCTION IN POST DEVELOPMENT PEAK RUNOFF RATES AS COMPARED TO PREDEVELOPMENT RATES. PER THE REQUIREMENTS OF THE CITY OF ALEXANDRIA CDD#10, THE APPLICANT SHALL COMPLY WITH THE PHOSPHORUS REDUCTION REQUIREMENTS AND PRODUCE AN OVERALL POST-DEVELOPMENT TOTAL PHOSPHOROUS LOAD EQUAL TO OR LESS THAN 0.65 LB/AC/YR (WHICH IS A 42% REDUCTION FROM EXISTING CONDITIONS). THIS REQUIREMENT IS STRICTER THAN THE ALEXANDRIA ZONING ORDINANCE WHICH REQUIRES A 10% REDUCTION IN PHOSPHORUS LOADING RATES AS COMPARED TO PREDEVELOPMENT RATES FOR LAND DISTURBING ACTIVITIES DISTURBING LESS THAN ONE ACRE.

TO MEET THESE REQUIREMENTS, A VARIETY OF STORMWATER BMPS WILL BE PROPOSED THROUGHOUT THE SITE. PERMEABLE PAVERS WILL BE INSTALLED ON PATHWAYS THAT ARE NOT EMERGENCY ACCESS ROUTES IN ACCORDANCE WITH VIRGINIA DEQ STORMWATER DESIGN SPECIFICATION NO. 7. NEW PATHWAYS WILL BE INSTALLED WITH PERMEABLE PAVERS. EXISTING PATHS THAT WILL BE DISTURBED AS PART OF THIS PROJECT OR PROJECTS BY OTHERS IN THE PARK WILL BE REPLACED WITH PERMEABLE PAVERS. IN PRELIMINARY DESIGN, THE LIMITS AND ACREAGE OF PERMEABLE PAVERS WILL BE DETERMINED.

SHEETFLOW TO CONSERVATION AREAS WITH C/D SOILS WILL BE USED TO DISCONNECT IMPERVIOUS SIDEWALKS AND PATHS WHERE POSSIBLE IN ACCORDANCE WITH VIRGINIA DEQ STORMWATER DESIGN SPECIFICATION NO. 2. LANDS ADJACENT TO IMPERVIOUS SURFACES WHERE THE LAND SLOPE AND SLOPE LENGTH MEET THE DESIGN SPECIFICATION REQUIREMENTS, WILL BE INVESTIGATED IN PRELIMINARY DESIGN FOR USE AS CONSERVATION AREAS.

SMALL BIORETENTION AREAS AND URBAN BIORETENTION PER VIRGINIA DEQ STORMWATER DESIGN SPECIFICATION NO. 9 WILL BE INVESTIGATED IN PRELIMINARY DESIGN TO TREAT AREAS OF IMPERVIOUS SURFACES NOT OTHERWISE TREATED. UNDERDRAINS WILL BE PROVIDED AS THE SITE DOES NOT INFILTRATE.

ANY REMAINING IMPERVIOUS SURFACES REQUIRING MITIGATION WILL BE TREATED IN SUBSURFACE FEATURES OR IN THE EXISTING STORMWATER WET POND. THE DESIGN TEAM DOES NOT ANTICIPATE PURCHASING OFFSITE CREDITS TO MEET THE APPLICABLE REQUIREMENTS AT THIS TIME.

FLOW FROM DOWNSPOUTS, FOUNTAIN DRAINS, AND SUMP PUMPS SHALL BE DISCHARGED TO THE STORM SEWER OUTFALL AS PER THE REQUIREMENTS OF THE MEMORANDUM TO THE INDUSTRY ON DOWNSPOUTS, FOUNTAIN DRAINS, AND SUMP PUMPS, DATED JUNE 18, 2004 THAT IS AVAILABLE ON THE CITY OF ALEXANDRIA'S WEBSITE. THIS PROJECT WILL NOT CONTRIBUTE TO THE SANITARY SYSTEM IN ANY WAY. ALL BUILDINGS ON SITE ARE PERMITTED UNDER A SEPARATE CONTRACT.

THE PRELIMINARY SUBMISSION WILL INCLUDE PRE AND POST DEVELOPMENT 2 AND 10 YEAR STORMWATER COMPUTATIONS DEMONSTRATING COMPLIANCE WITH STORMWATER QUANTITY AND QUALITY REQUIREMENTS OF THE ALEXANDRIA ZONING ORDINANCE AND CDD #10. THE VIRGINIA RUNOFF REDUCTION METHOD WORKSHEETS, INCLUDING THE TABS FOR CHANNEL PROTECTION AND FLOOD PROTECTION, WILL BE POPULATED. THE WORKSHEETS WILL BE MODIFIED TO COMPARE AGAINST THE MORE STRINGENT CDD #10 CRITERIA INSTEAD OF THE ALEXANDRIA ZONING ORDINANCE REQUIREMENTS. PLAN MAPS INCLUDING THE DRAINAGE AREAS TO THE SITE AND SITE BMPS, SOIL TYPES, AND BMP LOCATIONS WILL BE PREPARED. CITY STANDARD ALEXANDRIA WATER QUALITY VOLUME DEFAULT BMP DATA BLOCKS WILL BE COMPLETED.

ARCHAEOLOGY NOTES:
1. THE APPLICANT/DEVELOPER SHALL CALL ALEXANDRIA ARCHAEOLOGY IMMEDIATELY (703-838-4399) IF ANY BURIED STRUCTURAL REMAINS (WALL FOUNDATIONS, WELLS, PRIVIES, CISTERNS, ETC.) OR CONCENTRATIONS OF ARTIFACTS ARE DISCOVERED DURING DEVELOPMENT. WORK MUST CEASE IN THE AREA OF THE DISCOVERY UNTIL A CITY ARCHAEOLOGIST COMES TO THE SITE AND RECORDS THE FINDS.
2. THE APPLICANT/DEVELOPER SHALL NOT ALLOW ANY METAL DETECTION OR ARTIFACT COLLECTION TO BE CONDUCTED ON THE PROPERTY, UNLESS AUTHORIZED BY ALEXANDRIA ARCHAEOLOGY.

APPROVED
SPECIAL USE PERMIT NO. DSUP 2016-0006
DEPARTMENT OF PLANNING & ZONING
DIRECTOR DATE
DEPARTMENT OF TRANSPORTATION & ENVIRONMENTAL SERVICES
SITE PLAN No.
DIRECTOR DATE
CHAIRMAN, PLANNING COMMISSION DATE
DATE RECORDED
INSTRUMENT NO. DEED BOOK NO. PAGE NO.

Michael Baker
INTERNATIONAL
3601 EISENHOWER AVENUE
SUITE 600
ALEXANDRIA, VIRGINIA 22310
TEL. 703.960.8800

Project Title
POTOMAC YARD PARK

COMMONWEALTH OF VIRGINIA
JOHN CRAIG FENNELL
Lic. No. 826
LANDSCAPE ARCHITECT

No.	Revision	Date
1.		
2.		
3.		
4.		
5.		
6.		
7.		
8.		

Drawn by: WDU Checked by: JCF
Scale: AS NOTED Date: 26 FEB 2016
Issued for
City of Alexandria Department of Project Implementation
Drawing Title
ENVIRONMENTAL CONDITIONS
Drawing Number
L-105
Project Number 151053

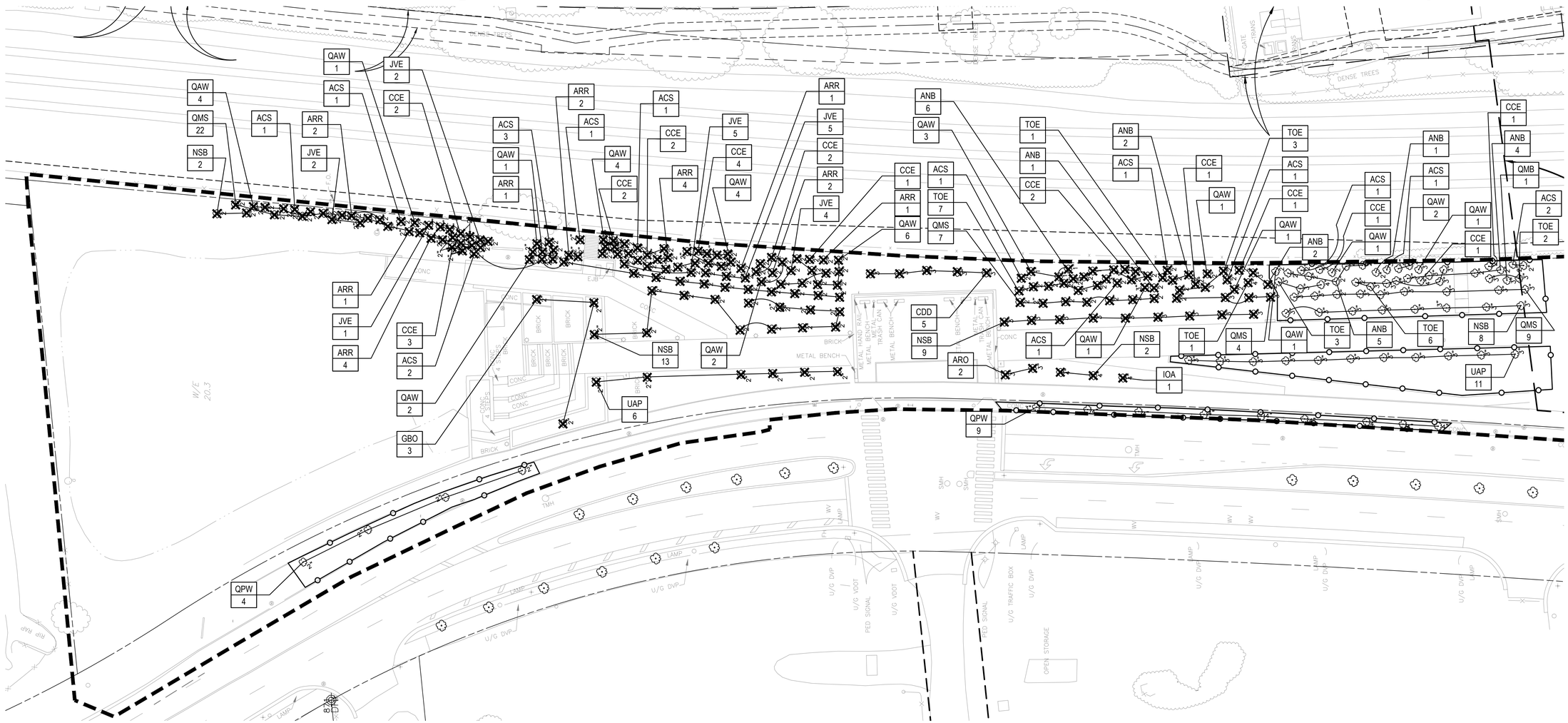

LEGEND

- EXISTING RIGHT OF WAY
- PROPOSED LIMIT OF WORK
- EXISTING TREE TO REMAIN
- EXISTING TREE TO BE REMOVED
- 1 / L-501 TREE PROTECTION

PLANT SYMBOL KEY

KEY	BOTANICAL NAME	COMMON NAME
ACS	Amelanchier canadensis	Serviceberry
ANB	Acer negundo	Boxelder
ARO	Acer rubum 'October Glory'	October Glory Red Maple
ARR	Acer rubum 'Red Sunset'	Red Sunset Red Maple
CCE	Cercis candadensis	Eastern Redbud
CDD	Cedrus deodara	Deodar Cedar
GBO	Ginkgo biloba 'Princeton Sentry'	Princeton Sentry Ginkgo
IOA	Ilex opaca	American Holly
JVE	Juniperus virginiana	Eastern Red Cedar
NSB	Nyssa sylvatica	Black Gum
QAW	Quercus alba	White Oak
QMB	Quercus marilandica	Blackjack Oak
QMS	Quercus michauxii	Swamp Chestnut Oak
QPW	Quercus phellos	Willow Oak
TOE	Thuja occidentalis	Eastern Arborvtae
UAP	Ulmus americana 'Princeton'	Princeton Elm

EXISTING TREES TO BE REMOVED

KEY	QUANTITY	BOTANICAL NAME	COMMON NAME	CROWN COVERAGE ALLOWANCE (SF)	OVERALL CANOPY COVERAGE (SF)
ACS	13	Amelanchier canadensis	Serviceberry	500	6,500
ANB	11	Acer negundo	Boxelder	1,250	13,750
ARO	2	Acer rubum 'October Glory'	October Glory Red Maple	1,250	2,500
ARR	18	Acer rubum 'Red Sunset'	Red Sunset Red Maple	1,250	22,500
CCE	20	Cercis candadensis	Eastern Redbud	500	10,000
CDD	5	Cedrus deodara	Deodar Cedar	500	2,500
GBO	3	Ginkgo biloba 'Princeton Sentry'	Princeton Sentry Ginkgo	750	2,250
IOA	1	Ilex opaca	American Holly	250	250
JVE	19	Juniperus virginiana	Eastern Red Cedar	250	4,750
NSB	26	Nyssa sylvatica	Black Gum	750	19,500
QAW	30	Quercus alba	White Oak	1,250	37,500
QMS	33	Quercus michauxii	Swamp Chestnut Oak	1,250	41,250
TOE	12	Thuja occidentalis	Eastern Arborvtae	250	3,000
UAP	6	Ulmus americana 'Princeton'	Princeton Elm	1,250	7,500
TOTAL	**199**				**173,750**

NOTES:

1. AS BUILT PLANTING INFORMATION IS IN PROGRESS
2. AS BUILT INFORMATION WILL BE ADDED TO PLANS WHEN PROVIDED BY CITY OF ALEXANDRIA
3. TREES ARE SHOWN TO BE REMOVED DUE TO STRUCTURES PROPOSED WITHIN DSUP 2016-0004 AND ASSOCIATED LAYDOWN AREAS TO BE DETERMINED.

30 15 0 30
SCALE: 1"=30'-0"

N
WMATA LDP
COORDINATE SYSTEM

ARCHAEOLOGY NOTES:
1. THE APPLICANT/DEVELOPER SHALL CALL ALEXANDRIA ARCHAEOLOGY IMMEDIATELY (703-838-4399) IF ANY BURIED STRUCTURAL REMAINS (WALL FOUNDATIONS, WELLS, PRIVIES, CISTERNS, ETC.) OR CONCENTRATIONS OF ARTIFACTS ARE DISCOVERED DURING DEVELOPMENT. WORK MUST CEASE IN THE AREA OF THE DISCOVERY UNTIL A CITY ARCHAEOLOGIST COMES TO THE SITE AND RECORDS THE FINDS.
2. THE APPLICANT/DEVELOPER SHALL NOT ALLOW ANY METAL DETECTION OR ARTIFACT COLLECTION TO BE CONDUCTED ON THE PROPERTY, UNLESS AUTHORIZED BY ALEXANDRIA ARCHAEOLOGY.

APPROVED
SPECIAL USE PERMIT NO. DSUP 2016-0006
DEPARTMENT OF PLANNING & ZONING
DIRECTOR DATE
DEPARTMENT OF TRANSPORTATION & ENVIRONMENTAL SERVICES
SITE PLAN No.
DIRECTOR DATE
CHAIRMAN, PLANNING COMMISSION DATE
DATE RECORDED
INSTRUMENT NO. DEED BOOK NO. PAGE NO.

Michael Baker
INTERNATIONAL
3601 EISENHOWER AVENUE
SUITE 600
ALEXANDRIA, VIRGINIA 22310
TEL. 703.960.8800

Project Title
POTOMAC YARD PARK

COMMONWEALTH OF VIRGINIA
JOHN CRAIG FENNELL
Lic. No. 826
LANDSCAPE ARCHITECT

No.	Revision	Date
1.		
2.		
3.		
4.		
5.		
6.		
7.		
8.		

Drawn by: BDC Checked by: JCF
Scale: AS NOTED Date: 26 FEB 2016
Issued for
City of Alexandria Department of Project Implementation

Drawing Title
EXISTING TREE SURVEY

Drawing Number
L-106

Project Number 151053

CITY STANDARD GENERAL NOTES

CONSTRUCTION PERMITS ARE REQUIRED FOR THIS PROJECT. THE APPROVED SITE PLAN MUST BE ATTACHED TO THE PERMIT APPLICATION THAT FULLY DETAILS THE CONSTRUCTION AS WELL AS LAYOUTS AND SCHEMATICS OF THE MECHANICAL, ELECTRICAL, AND PLUMBING SYSTEMS.
9. ALL PUBLIC AND PRIVATE EASEMENTS OR ALL KNOWN PUBLIC AND PRIVATE EASEMENTS, INCLUDING ALL UTILITY, EGRESS, AND CONSERVATION RESTRICTIONS ARE SHOWN. THE APPLICANT SHALL NOT CONSTRUCT ANY PERMANENT STRUCTURES OVER ANY EXISTING OR PROPOSED PUBLIC AND/OR PRIVATE EASEMENTS UNLESS OTHERWISE APPROVED BY THE PLANNING COMMISSION AND CITY OF ALEXANDRIA COUNCIL.
10. PLAT SUBJECT TO RESTRICTIONS OF RECORD.
11. BUILDING HEIGHT SHALL NOT EXCEED THE ALLOWABLE LIMIT BY CITY OF ALEXANDRIA ZONING ORDINANCE OR AS APPROVED BY THE PLANNING COMMISSION AND CITY OF ALEXANDRIA COUNCIL.
12. ALL NEW CONSTRUCTION SHALL CONFORM TO THE CURRENT STANDARDS AND SPECIFICATIONS OF THE CITY OF ALEXANDRIA AND TO THE VIRGINIA UNIFORM STATEWIDE BUILDING CODE (USBC).
13. FLOOR AREA CALCULATIONS WITH ALLOWABLE LIMITS, AS APPROVED BY PLANNING COMMISSION AND CITY COUNCIL, ARE DEMONSTRATED HEREIN.
14. PRIOR TO COMMENCING NEW WORK, THE CONTRACTOR SHALL PROTECT FROM DAMAGE ALL EXISTING ADJACENT AREAS. IF CITY'S EXISTING PUBLIC INFRASTRUCTURE, INCLUDING BUT NOT LIMITED, TO STREETS, ALLEYWAYS, DRIVEWAY APRONS, SANITARY AND STORM SEWERS, STREET LIGHTING, TRAFFIC AND PEDESTRIAN SIGNALS, SIDEWALKS, CURB AND GUTIER, AND STORM WATER DROP INLET STRUCTURES ARE DAMAGED BY THE CONTRACTOR OR BY ACTIVITIES RELATING TO THE SITE CONSTRUCTION THEN THE APPLICANT SHALL REPAIR THE SAME TO THE SATISFACTION OF DIRECTOR, TRANSPORTATION AND ENVIRONMENTAL SERVICES (T&ES). A PRE-CONSTRUCTION WALK/SURVEY OF THE SITE SHALL OCCUR WITH CONSTRUCTION AND INSPECTION STAFF TO DOCUMENT EXISTING CONDITIONS PRIOR TO ANY LAND DISTURBING ACTIVITY.
15. ALL IMPROVEMENTS TO THE CITY'S RIGHT-OF-WAY SUCH AS CURB, GUTIER, SIDEWALK, AND DRIVEWAY APRONS, ETC., ARE DESIGNED PER THE CITY OF ALEXANDRIA STANDARDS AND SPECIFICATIONS.
16. ALL STREET CUT AND PATCH WORK LOCATED IN PUBLIC RIGHT-OF-WAYS, REQUIRED FOR ANY UTILITY INSTALLATION SHALL BE PERFORMED IN STRICT ACCORDANCE WITH THE CITY OF ALEXANDRIA STANDARDS AND SPECIFICATIONS AND TO THE SATISFACTION OF THE DIRECTOR OF TRANSPORTATION AND ENVIRONMENTAL SERVICES (T&ES).
17. CONTRACTOR MUST ENSURE THAT THERE IS NO DISTURBANCE ON ADJACENT PROPERTIES WITHOUT RECORDED EASEMENT OR NOTARIZED LETIER OF PERMISSION FROM THE ADJACENT PROPERTY OWNERS.
18. ALL REQUIRED STATE AND FEDERAL PERMITS, WHICH COULD INCLUDE PERMITS FROM THE VIRGINIA DEPARTMENT OF CONSERVATION AND RECREATION (VDCR), VIRGINIA DEPARTMENT OF ENVIRONMENTAL QUALITY (VDEQ), VIRGINIA DEPARTMENT OF HISTORIC RESOURCES (VDHR), UNITED STATES ENVIRONMENTAL PROTECTION AGENCY (USEPA), ARMY CORPS OF ENGINEERS AND VIRGINIA MARINE RESOURCES, MUST BE IN PLACE FOR ALL PROJECT CONSTRUCTION AND MITIGATION WORK PRIOR TO RELEASE OF THE FINAL SITE PLAN. THIS INCLUDES THE STATE REQUIREMENT FOR A VIRGINIA STORMWATER MANAGEMENT PROGRAM (VSMP) GENERAL PERMIT FOR DISCHARGES OF STORMWATER FROM CONSTRUCTION ACTIVITIES FOR LAND DISTURBING ACTIVITIES GREATER THAN 2,500. INFORMATION REGARDING THE VSMP GENERAL PERMIT CAN BE FOUND ONLINE AT: http://www.dcr.virginia.gov/soil and water/vsmp.shtml.
19. PERMITS FROM THE CITY OF ALEXANDRIA OFFICE OF ENVIRONMENTAL QUALITY (OEQ), TRANSPORTATION AND ENVIRONMENTAL SERVICES (T&ES), AND BUILDING AND FIRE CODE ADMINISTRATION SHALL BE OBTAINED BY THE APPLICANT, AS REQUIRED AND DOCUMENTED HEREIN. THE CONTRACTOR CAN CONTACT ALEXANDRIA FIRE AND CODE ADMINISTRATION DEPARTMENT AT (703) 838-4644 OR (703) 746-4200 FOR ANY QUESTIONS OR ADDITIONAL INFORMATION.
20. ANY WORK IN THE PUBLIC RIGHT OF WAY SHALL REQUIRE A SEPARATE PERMIT FROM THE DIRECTOR, TRANSPORTATION AND ENVIRONMENTAL SERVICES. THE CONTRACTOR CAN CONTACT THE DEPARTMENT OF TRANSPORTATION AND ENVIRONMENTAL SERVICES AT (703) 746-4035 FOR ANY QUESTIONS OR ADDITIONAL INFORMATION.
21. THE PROPERTY ADDRESS MUST BE CLEARLY MARKED IN THE FRONT AND BACK OF THE PROPOSED DEVELOPMENT SITE DURING CONSTRUCTION FOR EMERGENCY RESPONSE PURPOSE IN CONTRASTING COLORS FOR EASY IDENTIFICATION.
22. THE APPLICANT SHALL CONTACT THE CRIME PREVENTION UNIT OF THE ALEXANDRIA POLICE DEPARTMENT AT 703-838-4520 REGARDING SECURITY HARDWARE FOR NEW CONSTRUCTION. THIS SHALL BE COMPLETED PRIOR TO ISSUANCE OF BUILDING PERMIT.
23. ROOF DRAINAGE SYSTEM, SUMP PUMP DISCHARGE, AND FOUNDATION DRAIN SYSTEM MUST BE INSTALLED SO AS NEITHER TO ADVERSELY IMPACT UPON, NOR CAUSE EROSION DAMAGE TO ADJACENT PROPERTIES OR THE PUBLIC RIGHT OF WAY.
24. THE CONTRACTOR MUST ENSURE THAT POSITIVE DRAINAGE OCCURS ON SITE TO PREVENT PONDING OR DRAINAGE PROBLEMS ON ADJACENT PROPERTIES.
25. IN THE EVENT, THE PROPOSED ROOF DRAINAGE AND/OR SUMP PUMP DISCHARGE, AND FOUNDATION DRAIN SYSTEMS AND/OR GRADING ADVERSELY IMPACTS AND/OR CREATES A NUISANCE ON PUBLIC RIGHT OF WAY OR PRIVATE PROPERTIES THEN THE APPLICANT SHALL BE RESPONSIBLE TO PROVIDE ADDITIONAL IMPROVEMENTS TO THE ROOF DRAINAGE AND/OR SUMP PUMP DISCHARGE AND FOUNDATION DRAIN SYSTEMS AND/OR GRADING TO THE SATISFACTION OF DIRECTOR, TRANSPORTATION AND ENVIRONMENTAL SERVICES.
26. PER THE REQUIREMENTS OF SECTION 8-1-12 OF THE CITY CHARTER AND CODE; WHEN THE BUILDING FOOTING HAS BEEN PLACED AND THE WALLS HAVE BEEN RAISED TO THE FIRST JOIST BEARING OR STORY HEIGHT ABOVE GRADE, A PLOT PLAN SHOWING THE EXACT LOCATION OF THE WALLS SHALL BE PREPARED BY A LICENSED, CERTIFIED PUBLIC LAND SURVEYOR OR PROFESSIONAL ENGINEER AND FILED WITH THE BUILDING OFFICIAL FOR APPROVAL BEFORE PROCEEDING FURTHER WITH THE CONSTRUCTION.
27. A SEPARATE DESIGN IS REQUIRED FOR ALL WALLS 24" AND OVER IN HEIGHT FROM THE GRADE AND SUBJECT TO SEPARATE PERMITS TO BE OBTAINED BY THE OWNERS.

CITY STANDARD GENERAL NOTES

GEOTECHNICAL AND STRUCTURAL DESIGN IS TO BE COMPLETED BY OTHERS. THIS FINAL SITE PLAN SHOWS LOCATION, PROPOSED GRADING, AND DESIGN OF ALL THE WALLS.
28. SUBMIT A SURVEY, CONSISTENT WITH THE REQUIREMENTS FOR CERTIFICATE OF OCCUPANCY CHECKLIST, TO THE DEPARTMENT OF TRANSPORTATION AND ENVIRONMENTAL SERVICES PRIOR TO REQUESTING AN INSPECTION FOR A CERTIFICATE OF OCCUPANCY.
29. ALL SANITARY LATERALS AND/OR SEWERS NOT SHOWN IN THE EASEMENTS SHALL BE OWNED AND MAINTAINED PRIVATELY.
30. ALL STORM DRAINS NOT SHOWN WITHIN AN EASEMENT OR IN A PUBLIC RIGHT OF WAY SHALL BE OWNED AND MAINTAINED PRIVATELY.
31. ALL WATER FACILITY CONSTRUCTION SHALL CONFORM TO VIRGINIAAMERICAN WATER COMPANY STANDARDS AND SPECIFICATIONS. CONTRACTOR SHALL CONTACT VIRGINIA AMERICAN WATER COMPANY AT (703) 549-7080 TO COORDINATE CONSTRUCTION AND INSPECTION OF WATER FACILITIES.
32. THE SIDEWALKS SHALL REMAIN OPENED DURING CONSTRUCTION OR PEDESTRIAN ACCESS SHALL BE MAINTAINED TO THE SATISFACTION OF THE DIRECTOR OF TRANSPORTATION AND ENVIRONMENTAL SERVICES THROUGHOUT THE CONSTRUCTION OF THE PROJECT.
33. PRIOR TO THE RELEASE OF THE FINAL SITE PLAN, A TRAFFIC CONTROL PLAN FOR CONSTRUCTION DETAILING PROPOSED CONTROLS TO TRAFFIC MOVEMENT, LANE CLOSURES, CONSTRUCTION ENTRANCES, HAUL ROUTES, AND STORAGE AND STAGING SHALL BE PROVIDED FOR INFORMATION PURPOSE; HOWEVER, AN AMENDED TRAFFIC CONTROL PLAN, IF REQUIRED BY THE DIRECTOR OF TRANSPORTATION AND ENVIRONMENTAL SERVICES SHALL BE SUBMITIED TO THE DIRECTOR OF TRANSPORTATION AND ENVIRONMENTAL SERVICES ALONG WITH THE BUILDING PERMIT APPLICATION. THE FINAL SITE PLAN SHALL INCLUDE A STATEMENT "FOR INFORMATION ONLY" ON THE TRAFFIC CONTROL PLAN SHEETS.
34. A CERTIFICATE OF OCCUPANCY SHALL BE OBTAINED PRIOR TO ANY OCCUPANCY OF THE BUILDING OR PORTION THEREOF, IN ACCORDANCE WITH VIRGINIA USBC 115.0.

EMERGENCY VEHICLE EASEMENTS NOTE
ALL EMERGENCY VEHICLE EASEMENTS ARE SHOWN ON THE PLAN AND SHALL BE RECORDED WITH ALEXANDRIA LAND RECORDS

GENERAL EROSION AND SEDIMENT CONTROL NOTES
1. AN EROSION AND SEDIMENT CONTROL PLAN MUST BE APPROVED BY THE DIRECTOR OF TRANSPORTATION AND ENVIRONMENTAL SERVICES PRIOR TO ANY LAND DISTURBING ACTIVITY GREATER THAN 2,500 SQUARE FEET.
2. ALL VEGETATIVE AND STRUCTURAL EROSION AND SEDIMENT CONTROL PRACTICES SHALL BE CONSTRUCTED AND MAINTAINED ACCORDING TO MINIMUM STANDARDS AND SPECIFICATIONS OF THE CITY OF ALEXANDRIA AND VIRGINIA EROSION AND SEDIMENT CONTROL HANDBOOK (VESCH), VIRGINIA REGULATIONS §4VAC50-30 EROSION AND SEDIMENT CONTROL REGULATIONS.
3. AN EROSION AND SEDIMENT CONTROL PLAN IS INCLUDED WITH THESE FINAL PLANS FOR APPROVAL BY THE DIRECTOR, TRANSPORTATION AND ENVIRONMENTAL SERVICES FOR REFERENCE BY THE EROSION AND SEDIMENT CONTROL PERMIT.
4. A "CERTIFIED LAND DISTURBER" (CLO) SHALL BE NAMED IN A LETIER TO THE DIVISION CHIEF OF CONSTRUCTION AND INSPECTION (C&I), DEPARTMENT OF TRANSPORTATION AND ENVIRONMENTAL SERVICES PRIOR TO ANY LAND DISTURBING ACTIVITIES. IF THE CLO CHANGES DURING THE PROJECT, THAT CHANGE MUST BE NOTED IN A LETIER TO THE DIVISION CHIEF. A NOTE TO THIS EFFECT SHALL BE PLACED ON THE PHASE I EROSION AND SEDIMENT CONTROL SHEETS ON THE SITE PLAN.
5. THE DEPARTMENT OF TRANSPORTATION AND ENVIRONMENTAL SERVICES, CONSTRUCTION AND INSPECTION (C&I) DIVISION MUST BE NOTIFIED ONE WEEK PRIOR TO THE PRE-CONSTRUCTION CONFERENCE, ONE WEEK PRIOR TO THE COMMENCEMENTS OF LAND DISTURBING ACTIVITY, AND ONE WEEK PRIOR TO THE FINAL INSPECTION. THE RESPONSIBLE CERTIFIED LAND DISTURBER (CLO) SHALL A TIEND THE PRE-CONSTRUCTION MEETING.
6. SEDIMENT BASINS AND TRAPS, PERIMETER DIKES, SEDIMENT BARRIERS AND ALL OTHER EROSION AND SEDIMENT CONTROL MEASURES INTENDED TO CONTROL EROSION AND TRAP SEDIMENT SHALL BE CONSTRUCTED AS A FIRST STEP IN ANY LANDDISTURBING ACTIVITY AND SHALL BE MADE FUNCTIONAL BEFORE UPSLOPE LAND DISTURBANCE TAKES PLACE.
7. CONSTRUCTION SHALL BE SEQUENCED SUCH THAT GRADING OPERATION CAN BEGIN AND END AS QUICKLY AS POSSIBLE. AREAS NOT TO BE DISTURBED MUST BE CLEARLY MARKED OR FLAGGED.
8. AN INSPECTION BY THE CITY OF ALEXANDRIA IS REQUIRED AFTER INITIAL INSTALLATION OF EROSION AND SEDIMENT CONTROL MEASURES AND BEFORE ANY CLEARING OR GRADING CAN BEGIN.
9. A COPY OF THE APPROVED EROSION AND SEDIMENT CONTROL PLAN SHALL BE MAINTAINED ON THE SITE AT ALL TIMES.
10. PRIOR TO COMMENCING LAND DISTURBING ACTIVITIES IN AREAS OTHER THAN THOSE INDICATED ON THESE PLANS INCLUDING, BUT NOT LIMITED TO, OFF-SITE BORROW OR WASTE AREAS, THE CONTRACTOR SHALL SUBMIT A SUPPLEMENTARY EROSION CONTROL PLAN TO THE OWNER FOR REVIEW AND APPROVAL BY THE CITY OF ALEXANDRIA.
11. THE DEVELOPER AND CONTRACTORS ARE TO KEEP DENUDED AREAS TO A MINIMUM. PERMANENT OR TEMPORARY SOIL STABILIZATION SHALL BE APPLIED TO DENUDED AREAS WITHIN SEVEN DAYS AFTER FINAL GRADE IS REACHED ON ANY PORTION OF THE SITE. TEMPORARY SOIL STABILIZATION SHALL BE APPLIED WITHIN SEVEN DAYS TO DENUDED AREAS THAT MAY NOT BE AT FINAL GRADE BUT WILL REMAIN DORMANT FOR LONGER THAN 30 DAYS. PERMANENT STABILIZATION SHALL BE APPLIED TO AREAS THAT ARE TO BE LEFT DORMANT FOR MORE THAN ONE YEAR. ANY STOCKPILED MATERAIL WHICH WILL REMAIN IN PLACE LONGER THAN 10 DAYS MUST BE SEEDED FOR TEMPORARY VEGETATION AND MULCHED WITH STRAW MULCH OR OTHERWISE STABILIZED.
12. ALL TEMPORARY EARTH BERMS, DIVERSIONS AND SEDIMENT CONTROL DAMS SHALL BE SEEDED AND MULCHED OR OTHERWISE STABILIZED AS SOON AS POSSIBLE BUT NO LA TEA THAN 48 HOURS AFTER GRADING.
13. ALL DISTURBED AREAS ARE TO DRAIN TO APPROVED SEDIMENT CONTROL MEASURES AT ALL TIMES DURING LAND DISTURBING ACTIVITIES AND DURING SITE DEVELOPMENT UNTIL FINAL STABILIZATION IS ACHIEVED.
14. DURING DEWATERING OPERATIONS, WATER SHALL BE PUMPED THROUGH AN APPROVED FIL TEAING DEVICE OR PASSED THROUGH AN APPROVED SEDIMENT TRAPPING DEVICE, OR BOTH, AND DISCHARGED IN A MANNER THAT DOES NOT ADVERSELY IMPACT FLOWING STREAMS OR OFF-SITE PROPERTY.
15. THE CONTRACTOR SHALL INSPECT ALL EROSION CONTROL MEASURES DAILY AND AFTER EACH RUNOFF-PRODUCING RAINFALL EVENT. ANY NECESSARY REPAIRS OR CLEANUP TO MAINTAIN THE EFFECTIVENESS OF THE EROSION CONTROL DEVICES SHALL BE MADE IMMEDIATELY.
16. THE CONTRACTOR IS RESPONSIBLE FOR INSTALLATION OF ANY ADDITIONAL EROSION CONTROL MEASURES AS NECESSARY TO PREVENT EROSION AND SEDIMENTATION AND AS DETERMINED BY THE DIRECTOR OF TRANSPORTATION AND ENVIRONMENTAL (T&ES) SERVICES OF THE CITY OF ALEXANDRIA.
17. ANY DENUDED SLOPES, EITHER DISTURBED OR CREATED BY THIS PLAN THAT EXCEED 2500 SQUARE FEET SHALL BE SODDED AND PEGGED FOR STABILITY AND EROSION CONTROL. AT THE COMPLETION OF THE PROJECT AND PRIOR TO THE RELEASE OF THE BOND, ALL DISTURBED AREAS SHALL BE STABILIZED PERMANENTLY AND ALL TEMPORARY EROSION AND SEDIMENT CONTROLS SHALL BE REMOVED.
18. ALL VEHICLES SHALL BE CLEANED BEFORE ENTERING ONTO THE PUBLIC RIGHT-OFWAY.
19. THE WASH WATER FROM THE CONSTRUCTION ENTRANCE SHALL BE FILTERED THROUGH THE PROVIDED SILT FENCE TO ENSURE THAT NO SEDIMENT LADEN RUNOFF IS ALLOWED TO RUNOFF ON TO THE ADJACENT PROPERTY OR THE PUBLIC RIGHT OF WAY.
20. INSTALL SILT FENCE AND TREE PROTECTION, WHERE APPLICABLE.
21. DUST CONTROL SHALL BE ACCOMPLISHED BY TEMPORARY VEGETATIVE COVER AND BY IRRIGATION AS NEEDED.

SEQUENCE OF CONSTRUCTION FOR INSTALLATION OF EROSION AND SEDIMENT CONTROL DEVICES
1. INSTALL PERIMETER EROSION AND SEDIMENT CONTROLS; AND STABILIZE CONSTRUCTION ENTRANCE AS SHOWN ON THIS PLAN.
2. ALL VEGETATION PRESERVATION AND PROTECTION METHODS SHALL BE APPROVED I VERIFIED IN FIELD BY THE CITY ARBORIST PRIOR TO COMMENCEMENT OF ANY GROUND DISTURBING ACTIVITY.
3. INSTALL INLET PROTECTION AT EXISTING STORM DRAIN INLETS AS NECESSARY AND AS SHOWN ON THIS PLAN.
4. INSTALL ADDITIONAL EROSION AND SEDIMENT CONTROL PRACTICES AS NECESSARY AND AS DIRECTED BY THE EROSION AND SEDIMENT CONTROL INSPECTOR.
5. CONDUCT DEMOLITION AND CONSTRUCTION ACTIVITIES ACCORDING TO THE APPLICABLE PLANS.
6. AS CONTRIBUTARY DRAINAGE AREAS ARE STABILIZED AND WITH THE PERMISSION OF THE EROSION AND SEDIMENT CONTROL INSPECTOR, REMOVE INDIVIDUAL EROSION AND SEDIMENT CONTROL PRACTICES.
7. UPON COMPLETION OF DEMOLITION, CONSTRUCTION AND LAND DISTURBING ACTIVITIES; PROVIDE PERMANENT STABILIZATION ACCORDING TO APPROVED METHODS AND REMOVE ALL REMAINING EROSION AND SEDIMENT CONTROL MEASURES WITH THE APPROVAL OF THE EROSION AND SEDIMENT CONTROL INSPECTOR.

SEDIMENT TRAPS AND BASINS
SINCE THE TOTAL DRAINAGE AREA TO BE SERVED IS GREATER THAN THREE ACRES, THEREFORE, A SEDIMENT BASIN IS DESIGNED USING THE CRITERIA THAT THE MINIMUM STORAGE CAPACITY OF THE TRAP IS 134 CUBIC YARDS PER ACRE OF DRAINAGE AREA. THE OUTFALL SYSTEM IS DESIGNED TO MAINTAIN THE STRUCTURAL INTEGRITY OF THE BASIN DURING A 25-YEAR 24-HOUR DURATION STORM. THE RUNOFF COEFFICIENTS USED IN THE RUNOFF CALCULATIONS CORRESPOND TO THOSE CONDITIONS EXPECTED TO EXIST WHILE THE SEDIMENT BASIN IS UTILIZED.

COMPUTATION OF PEAK RUNOFF RATE
THE PRE AND POST DEVELOPMENT PEAK RATES OF RUNOFF ARE COMPUTED BY THE RATIONAL METHOD USING THE CITY OF ALEXANDRIA INTENSITYDURATION-FREQUENCY (IDF) CURVES, DESIGN AND CONSTRUCTION STANDARDS, DEPARTMENT OF TRANSPORTATION AND ENVIRONMENTAL SERVICES, JULY 1989. AN INLET TIME OF CONCENTRATION OF 5 MINUTES HAS BEEN USED FOR BUSINESS, COMMERCIAL, APARTMENT AND TOWNHOUSE COMPLEXES AS IN AN ULTRA URBAN ENVIRONMENT. ALL HYDROLOGIC ANALYSES RELATED TO PRE AND POST DEVELOPMENT ARE BASED ON THE EXISTING WATERSHED CHARACTERISTICS AND THE ULTIMATE DEVELOPMENT OF THE SUBJECT PROJECT, RESPECTIVELY.

STORMWATER MANAGEMENT PLAN
THE PLAN DEMONSTRATES THAT THE SITE HAS BEEN DEVELOPED TO INCREASE THE POST DEVELOPMENT PEAK RUNOFF RATE FROM THE PRE-DEVELOPMENT PEAK RUNOFF RATE FOR A TWO-YEAR AND TEN YEAR STORM CONSIDERED INDIVIDUALLY. THEREFORE, STORMWATER DETENTION IS PROVIDED PER THE REQUIREMENTS OF ARTICLE 13-109(F)(1) OF ALEXANDRIA ZONING ORDINANCE NOT TO RELEASE STORMWATER FROM THE SITE AT A HIGHER RATE THAN PRE DEVELOPMENT CONDITION. AN ADEQUATE OUTFALL ANALYSIS IS PROVIDED TO DEMONSTRATE THAT THE STORMWATER IS DISCHARGED INTO AN ADEQUATE OUTFALL PER THE REQUIREMENTS OF ARTICLE XI, SECTION 11-410 (N).

STORMWATER BMP AND DETENTION FACILITIES MAINTENANCE AGREEMENT
THE APPLICANT SHALL SUBMIT TO THE CITY OF ALEXANDRIA A STORMWATER BMP AND DETENTION FACILITIES MAINTENANCE AGREEMENT WITH FINAL #2 SUBMISSION.

ENVIRONMENTAL SITE ASSESSMENT
1. THERE ARE NO TIDAL WETLANDS, TIDAL SHORES, TRIBUTARY STREAMS, FLOODPLAINS, CONNECTED TIDAL WETLANDS, ISOLATED WETLANDS, HIGHLY ERODIABLE/PERMEABLE SOILS OR BUFFER AREAS ASSOCIATED WITH SHORES, STREAMS, OR WETLANDS LOCATED ON THE SITE. FURTHER, THERE ARE NO WETLAND PERMITS REQUIRED FOR THIS DEVELOPMENT PROJECT. ADDITIONALLY, THERE ARE NO KNOWN UNDERGROUND STORAGE TANKS OR AREAS OF SOIL OR GROUNDWATER CONTAMINATION ON THE SITE.
2. THE CITY OF ALEXANDRIA DEPARTMENT OF TRANSPORTATION AND ENVIRONMENTAL SERVICES, OFFICE OF ENVIRONMENTAL QUALITY MUST BE NOTIFIED IF UNUSUAL OR UNANTICIPATED CONTAMINATION OR UNDERGROUND STORAGE TANKS, DRUMS, AND CONTAINERS ARE ENCOUNTERED AT THE SITE. IF THERE IS ANY DOUBT ABOUT PUBLIC SAFETY OR A RELEASE TO THE ENVIRONMENT, THE ALEXANDRIA FIRE DEPARTMENT MUST BE CONTACTED IMMEDIATELY BY CALLING 911. THE TANK OR CONTAINER'S REMOVAL, ITS CONTENTS, ANY SOIL CONTAMINATION AND RELEASES TO THE ENVIRONMENT WILL BE HANDLED IN ACCORDANCE WITH FEDERAL, STATE, AND CITY REGULATIONS.
3. ALL WELLS TO BE DEMOLISHED IN THIS PROJECT, INCLUDING MONITORING WELLS MUST BE CLOSED IN ACCORDANCE WITH VIRGINIA STATE WATER CONTROL BOARD (VSWCB) REQUIREMENTS. CONTACT ENVIRONMENTAL HEALTH SPECIALIST AND COORDINATE WITH THE ALEXANDRIA HEALTH DEPARTMENT AT 703-838-4400 EXT 267/255.
4. ALL CONSTRUCTION ACTIVITIES MUST COMPLY WITH THE ALEXANDRIA NOISE CONTROL CODE TITLE 11, CHAPTER 5, WHICH PERMITS CONSTRUCTION ACTIVITIES TO OCCUR BETWEEN THE FOLLOWING HOURS:
• MONDAY THROUGH FRIDAY FROM 7 AM TO 6 PM AND
• SATURDAYS FROM 9 AM TO 6 PM.
• NO CONSTRUCTION ACTIVITIES ARE PERMITTED ON SUNDAYS.
PILE DRIVING IS FURTHER RESTRICTED TO THE FOLLOWING HOURS:
• MONDAY THROUGH FRIDAY FROM 9 AM TO 6 PM AND
• SATURDAYS FROM 10 AM TO 4 PM.

STORMWATER BEST MANAGEMENT PRACTICES (BMP) NOTES
THE STORMWATER BEST MANAGEMENT PRACTICES (BMP) REQUIRED FOR THIS PROJECT SHALL BE CONSTRUCTED AND INSTALLED UNDER THE DIRECT SUPERVISION OF THE DESIGN ENGINEER OR HIS DESIGNATED REPRESENTATIVE. THE DESIGN ENGINEER SHALL MAKE A WRITIEN CERTIFICATION TO THE CITY THAT THE BMPs ARE CONSTRUCTED AND INSTALLED AS DESIGNED AND IN ACCORDANCE WITH THE APPROVED SITE PLAN. IN ADDITION, AGGREGATE LAYERS AND COLLECTOR PIPES MAY NOT BE INSTALLED UNLESS THE DESIGN ENGINEER OR HIS REPRESENTATIVE IS PRESENT.
THE CONTRACTOR SHALL FURNISH THE CITY WITH AN OPERATION AND MAINTENANCE MANUAL FOR ALL BMPs ON THE PROJECT. THE MANUAL SHALL INCLUDE AN EXPLANATION OF THE FUNCTIONS AND OPERATIONS OF EACH BMP AND ANY SUPPORTING UTILITIES, CATALOG CUTS ON ANY MECHANICAL OR ELECTRICAL EQUIPMENT AND A SCHEDULE OF ROUTINE MAINTENANCE FOR THE BMPs AND SUPPORTING EQUIPMENT.

ARCHAEOLOGY NOTES:
1. THE APPLICANT/DEVELOPER SHALL CALL ALEXANDRIA ARCHAEOLOGY IMMEDIATELY (703--838--4399) IF ANY BURIED STRUCTURAL REMAINS (WALL FOUNDATIONS, WELLS, PRIVIES, CISTERNS, ETC.) OR CONCENTRATIONS OF ARTIFACTS ARE DISCOVERED DURING DEVELOPMENT. WORK MUST CEASE IN THE AREA OF THE DISCOVERY UNTIL A CITY ARCHAEOLOGIST COMES TO THE SITE AND RECORDS THE FINDS.
2. THE APPLICANT/DEVELOPER SHALL NOT ALLOW ANY METAL DETECTION OR ARTIFACT COLLECTION TO BE CONDUCTED ON THE PROPERTY, UNLESS AUTHORIZED BY ALEXANDRIA ARCHAEOLOGY.

APPROVED
SPECIAL USE PERMIT NO. DSUP 2016-0006
DEPARTMENT OF PLANNING & ZONING

DIRECTOR DATE
DEPARTMENT OF TRANSPORTATION & ENVIRONMENTAL SERVICES
SITE PLAN No.

DIRECTOR DATE

CHAIRMAN, PLANNING COMMISSION DATE

DATE RECORDED

INSTRUMENT NO. DEED BOOK NO. PAGE NO.

Michael Baker
INTERNATIONAL
3601 EISENHOWER AVENUE
SUITE 600
ALEXANDRIA, VIRGINIA 22310
TEL. 703.960.8800

Project Title
POTOMAC YARD PARK

COMMONWEALTH OF VIRGINIA
JOHN CRAIG FENNELL
Lic. No. 826
LANDSCAPE ARCHITECT

No.	Revision	Date
1.		
2.		
3.		
4.		
5.		
6.		
7.		
8.		

Drawn by: JCF Checked by: JCF
Scale: AS NOTED Date: 26 FEB 2016
Issued for
City of Alexandria Department of Project Implementation

Drawing Title
CITY NOTES

Drawing Number
L-107

Project Number 151053

UTILITY WORKS

UNDERGROUND UTILITY LINES SHALL BE INSTALLED IN ACCORDANCE WITH THE FOLLOWING MINIMUM STANDARDS DESCRIBED IN SECTION 4VAC50-30-40 OF THE VIRGINIA EROSION AND SEDIMENT CONTROL HANDBOOK (VESCH) AND ADDITIONAL APPLICABLE PRACTICES FOLLOWED BY THE CITY OF ALEXANDRIA:

A. ALL PRIVATE UTILITIES SHALL BE LOCATED OUTSIDE OF THE PUBLIC RIGHT-OFWAY AND PUBLIC UTILITY EASEMENTS UNLESS THE UTILITY OWNERS HAVE FRANCHISE AGREEMENT WITH THE CITY OF ALEXANDRIA; HOWEVER, NO ELECTRIC TRANSFORMERS AND SWITCH GEARS I CONTROL BOXES SHALL BE PLACED IN THE PUBLIC RIGHT OF WAY.

B. ALL THE EXISTING AND PROPOSED PUBLIC AND PRIVATE UTILITIES AND EASEMENTS SHALL BE SHOWN AND A DESCRIPTIVE NARRATION OF VARIOUS UTILITIES SHALL BE PROVIDED ON THE PLAN.

C. IT IS THE CONTRACTOR'S RESPONSIBILITY TO MAINTAIN UTILITY SERVICES AT ALL TIMES DURING CONNECTION AND/OR CONSTRUCTION.

D. NO MORE THAN 500 LINEAR FEET OF TRENCH MAY BE OPENED AT ONE TIME.

E. EXCAVATED MATERIAL SHALL BE PLACED ON THE UPHILL SIDE OF TRENCHES.

C. EFFLUENT FROM DEWATERING OPERATIONS SHALL BE FILTERED OR PASSED THROUGH AN APPROVED SEDIMENT TRAPPING DEVICE, OR BOTH, AND DISCHARGED IN A MANNER THAT DOES NOT ADVERSELY AFFECT FLOWING STREAMS OR OFF-SITE PROPERTY.

D. MATERIAL USED FOR BACKFILLING TRENCHES SHALL BE PROPERLY COMPACTED IN ACCORDANCE WITH THE CITY OF ALEXANDRIA STANDARDS AND SPECIFICATIONS TO MINIMIZE EROSION AND PROMOTE STABILIZATION.

E. SHOULD UTILITY CONSTRUCTION BE PERFORMED AFTER COMPLETING EARTHWORK, THE CONTRACTOR SHALL BE RESPONSIBLE FOR ACHIEVING 98 PERCENT OF THE MODIFIED PROCTOR MAXIMUM DRY DENSITY (ASTM D-1551) COMPACTION IN ALL TRENCH BACKFILL.

F. RESTABILIZATION SHALL BE ACCOMPLISHED IN ACCORDANCE WITH THE VIRGINIA REGULATIONS §4VAC50-30 EROSION AND SEDIMENT CONTROL REGULATIONS, VIRGINIA EROSION AND SEDIMENT CONTROL HANDBOOK (VESCH).

G. APPLICABLE SAFETY REGULATIONS SHALL BE COMPLIED WITH.

H. THE CONTRACTOR IS RESPONSIBLE FOR INSTALLATION OF ANY ADDITIONAL CONTROL MEASURES AS NECESSARY TO PREVENT EROSION AND SEDIMENTATION, AS DETERMINED BY THE DIRECTOR OF TRANSPORTATION AND ENVIRONMENTAL SERVICES, CITY OF ALEXANDRIA.

I. A REMEDIATION PLAN SHALL BE SUBMITTED DETAILING HOW CONTAMINATED SOILS AND/OR GROUNDWATER WILL BE DEALT WITH, INCLUDING PLANS TO REMEDIATE UTILITY CORRIDORS.

J. UTILITY CORRIDORS IN CONTAMINATED SOIL SHALL BE OVER EXCAVATED BY 2 FEET AND BACKFILLED WITH "CLEAN" SOIL.

K. GRADING CAN BE PERFORMED ON INSTALLATION OF UTILITIES.

L. ALL UTILITIES SUCH AS ELECTRICAL LINES, GAS PIPES, COMMUNICATION CABLES, INCLUDING WATER AND SEWER LATERALS ON PRIVATE PROPERTY IN THE CITY OF ALEXANDRIA SHALL BE PROVIDED WITH MINIMUM 3" WIDE 5 MIL OVERALL THICKNESS DETECTABLE UNDERGROUND WARNING TAPE (DUWT). THE DUWT SHALL BE INSTALLED AT DEPTHS OF 12" TO 18" FOR DUWT WIDTHS OF 3" AND 24" FOR WIDTHS OF 6" SO AS TO MAKE UNDERGROUND INSTALLATIONS EASY TO FIND USING A NON-FERROUS LOCATOR. THE DUWT SHALL BE WITH ALUMINUM BACKING OR SOLID ALUMINUM CORE LAMINATED WITH A PROTECTIVE CLEAR FILM ON BOTH SIDES, SEALING AND PROTECTING THE GRAPHICS FROM UNDERGROUND MOISTURE, ACIDS, ALKALIS, AND OTHER SOIL SUBSTANCES. ALL DUWT TAPES SHALL BE PRINTED IN BLACK INK ON AMERICAN PUBLIC WORKS ASSOCIATION (APWA) APPROVED COLORS TO MEET OR EXCEED INDUSTRY STANDARDS.

SOLID WASTE MANAGEMENT

1. IN COMPLIANCE WITH TITLE 5: TRANSPORTATION AND ENVIRONMENTAL SERVICES, SECTION 5-1-31 OF THE CITY CHARTER AND CODE, THE CITY OF ALEXANDRIA WILL PROVIDE SOLID WASTE COLLECTION SERVICES TO EVERY USER PROPERTY, DEFINED IN SECTION 5-1-2 (128) AS CONTAINING FOUR OR FEWER DWELLING UNITS EXCLUDING CONDOMINIUM DWELLINGS.

SINCE THE CITY OF ALEXANDRIA IS PROVIDING SOLID WASTE COLLECTION AND DISPOSAL SERVICES, THE PLAN DEMONSTRATES THAT THE DEVELOPMENT MEETS ALL THE MINIMUM STREET STANDARDS, INCLUDING ALL STANDARD CUL-DE-SAC TURNAROUNDS, IF APPLICABLE. THE TRASH TRUCK TURNING MOVEMENTS DEMONSTRATE THAT THE TRASH TRUCK IS ABLE TO PICK UP SOLID WASTE FROM PRIVATE STREETS WITHOUT BACKING UP.

SINCE THE CITY OF ALEXANDRIA WILL PROVIDE THE SOLID WASTE COLLECTION AND DISPOSAL SERVICES; ALL TRASH AND RECYCLING RECEPTACLES ARE SHOWN LOCATED AT THE CITY'S RIGHT-OF-WAY.

SIGN CONSTRUCTION

A SEPARATE PERMIT IS REQUIRED FOR SIGN CONSTRUCTION.

LANDSCAPE NOTES

1. ALL PROTECTION AND PRESERVATION MEASURES FOR EXISTING VEGETATION, INCLUDING MAINTENANCE AND PENALTIES SHALL BE PREPARED IN COMPLIANCE WITH LANDSCAPE GUIDELINES OF THE CITY OF ALEXANDRIA AND APPROVED BY THE CITY ARBORIST IN-FIELD PRIOR TO COMMENCEMENT OF ANY SITE DISTURBING AND CONSTRUCTION ACTIVITIES.
2. ALL VEGETATION PRESERVATION AND PROTECTION METHODS SHALL BE APPROVED I VERIFIED IN FIELD BY THE CITY ARBORIST PRIOR TO COMMENCEMENT OF ANY GROUND DISTURBING ACTIVITY.
3. LOCATION AND METHOD FOR PROTECTION AND PRESERVATION OF EXISTING TREES WILL BE SHOWN ON DEMOLITION, SEDIMENT AND EROSION CONTROL, AND LANDSCAPE PLAN SHEETS.
4. IT IS THE CONTRACTOR'S RESPONSIBILITY TO MAKE SURE THAT ANY EXISTING LANDSCAPING WHICH IS TO BE RELOCATED ON THE SITE WILL BE CAREFULLY STORED IN A DESIGNATED AREA BEFORE BEING REPLANTED. COORDINATION WITH THE OWNER FOR MUTUALLY AGREEABLE STORAGE LOCATIONS FOR LANDSCAPE MATERIAL SHALL BE THE RESPONSIBILITY OF THE CONTRACTOR. THE CONTRACTOR SHALL BE RESPONSIBLE FOR THE REPLACEMENT OF PLANT MATERIAL THAT DOES NOT SURVIVE STORAGE AND REPLANTING.
5. APPLICANT MUST INCLUDE ON THE PLAN DOCUMENTATION OF COMMUNICATION WITH THE ADJACENT PROPERTY OWNER(S) VERIFYING NOTIFICATION OF AND AGREEMENT WITH CONSTRUCTION IMPACT, POTENTIAL FOR LOSS, AND AGREED UPON REMEDIAL MEASURES PERTAINING TO THE EXISTING TREE(S) ON ADJACENT PROPERTIES THAT WILL BE AFFECTED BY PROJECT WORK.
6. INCLUDE SPECIFIC CONSTRUCTION STAGING INFORMATION ON THE PLAN THAT INDICATES THE METHODS, AND PROCEDURES TO BE IMPLEMENTED FOR PROTECTION OF EXISTING ON-SITE AND OFF-SITE VEGETATION.
7. PROPOSED PLANTING SHALL BE PROVIDED IN COMPLIANCE WITH LANDSCAPE GUIDELINES OF THE CITY OF ALEXANDRIA.
8. SPECIFICATION FOR ALL PLANTINGS SHALL BE IN ACCORDANCE WITH THE CURRENT AND MOST UP TO DATE EDITION OF ANSI-Z60.1, THE AMERICAN STANDARD FOR NURSERY STOCK AS PRODUCED BY THE AMERICAN ASSOCIATION OF NURSERYMEN; WASHINGTON, D.C.
9. THE APPLICANT SHALL MAKE SUITABLE ARRANGEMENTS FOR PRE-SELECTION TAGGING, PRE-CONTRACT GROWING, OR IS UNDERTAKING SPECIALIZED PLANTING STOCK DEVELOPMENT WITH A NURSERY OR GROWER THAT IS CONVENIENTLY LOCATED TO THE PROJECT SITE, OR UTILIZING OTHER PROCEDURES THAT WILL ENSURE AVAILABILITY OF SPECIFIED MATERIALS. IN THE EVENT THAT SHORTAGES AND/OR INABILITY TO OBTAIN SPECIFIED PLANTINGS OCCURS, REMEDIAL EFFORTS INCLUDING SPECIES CHANGES, ADDITIONAL PLANTINGS AND MODIFICATION TO THE LANDSCAPE PLAN SHALL BE UNDERTAKEN BY THE APPLICANT. ALL REMEDIAL EFFORTS SHALL, WITH PRIOR APPROVAL BY THE CITY, BE PERFORMED TO THE SATISFACTION OF THE DIRECTORS OF PLANNING & ZONING, RECREATION, PARKS & CULTURAL ACTIVITIES AND TRANSPORTATION & ENVIRONMENTAL SERVICES.
10. IN LIEU OF MORE STRENUOUS SPECIFICATIONS, ALL LANDSCAPE RELATED WORK SHALL BE INSTALLED AND MAINTAINED IN ACCORDANCE WITH THE CURRENT AND MOST UP-TO-DATE EDITION (AT TIME OF CONSTRUCTION) OF LANDSCAPE SPECIFICATION GUIDELINES AS PRODUCED BY THE LANDSCAPE CONTRACTORS ASSOCIATION OF MARYLAND, DISTRICT OF COLUMBIA AND VIRGINIA; GAITHERSBURG, MARYLAND.
11. PRIOR TO COMMENCEMENT OF LANDSCAPE INSTALLATION/PLANTING OPERATIONS, A PRE-INSTALLATION/CONSTRUCTION MEETING WILL BE SCHEDULED WITH THE CITY'S ARBORIST AND LANDSCAPE ARCHITECTS TO REVIEW THE SCOPE OF INSTALLATION PROCEDURES AND PROCESSES.
12. MAINTENANCE FOR THIS PROJECT SHALL BE PERFORMED IN PERPETUITY BY THE APPLICANT/OWNER/SUCCESSOR, IN COMPLIANCE WITH CITY OF ALEXANDRIA LANDSCAPE GUIDELINES AND/OR AS CONDITIONED BY PROJECT APPROVAL.
13. A CERTIFICATION LETTER FOR TREE WELLS, TREE TRENCHES AND PLANTINGS ABOVE STRUCTURE SHALL BE PROVIDED BY THE PROJECT'S LANDSCAPE ARCHITECT. THE LETTER SHALL CERTIFY THAT ALL BELOW GRADE CONSTRUCTION IS IN COMPLIANCE WITH APPROVED DRAWINGS AND SPECIFICATIONS. THE LETTER SHALL BE SUBMITTED TO THE CITY ARBORIST AND APPROVED PRIOR TO APPROVAL OF THE LAST AND FINAL CERTIFICATE OF OCCUPANCY FOR THE PROJECT. THE LEITER SHALL BE SUBMIITED BY THE OWNER/APPLICANT/SUCCESSOR AND SEALED AND DATED AS APPROVED BY THE PROJECT'S LANDSCAPE ARCHITECT.
14. AS-BUILT DRAWINGS FOR THIS LANDSCAPE PLAN AND/OR IRRIGATION/WATER MANAGEMENT SYSTEM WILL BE PROVIDED IN COMPLIANCE WITH CITY OF ALEXANDRIA LANDSCAPE GUIDELINES. AS-BUILT DRAWINGS SHALL INCLUDE CLEAR IDENTIFICATION OF ALL VARIATION($) AND CHANGES FROM APPROVED DRAWINGS INCLUDING LOCATION, QUANTITY AND SPECIFICATION OF ALL PROJECT ELEMENTS.

DEMOLITION NOTES

1. A SEPARATE PERMIT IS REQUIRED FOR DEMOLITION; HOWEVER, NO DEMOLITION SHALL BEGIN UNTIL ALL EROSION AND SEDIMENT AND TREE PROTECTION CONTROLS ARE IN PLACE AND ARE APPROVED BY AN EROSION AND SEDIMENT CONTROL INSPECTOR OF THE DEPARTMENT OF TRANSPORTATION AND ENVIRONMENTAL SERVICES.
2. ALL WORK SHALL BE PERFORMED IN STRICT COMPLIANCE WITH THE MOST CURRENT APPLICABLE FEDERAL, STATE, AND LOCAL LAWS AND REGULATIONS, INCLUDING BUT NOT LIMITED, TO ENVIRONMENTAL PROTECTION AGENCY (EPA), OCCUPATIONAL SAFETY AND HEALTH ADMINISTRATION (OSHA), VIRGINIA OCCUPATIONAL AND SAFETY HELATH COMPLIANCE PROGRAM (VOSH ENFORCEMENT), VIRGINIA OVERHEAD HIGH VOLTAGE LINE SAFETY ACT, NATIONAL EMISSIONS STANDARDS FOR HAZARDOUS AIR POLLUTANTS (NESHAPS), AND NATIONAL INSTITUTUE OF OCCUPATIONAL SAFETY AND HEAL TH (NIOSH).
3. THE CONTRACTOR SHALL BE RESPONSIBLE FOR THE COORDINATION OF WORK WITH REPRESENTATIVE UTILITY COMPANIES AND FOR THE IMPLEMENTATION OF REQUIRED UTILITY-RELATED WORK.
4. THE CONTRACTOR SHALL IMMEDIATELY NOTIFY THE OWNER'S REPRESENTATIVE UPON ENCOUNTERING ANY HAZARDOUS MATERIALS DURING DEMOLITION AND/OR CONSTRUCTION ACTIVITIES. THE CONTRACTOR SHALL DOCUMENT SAME TO THE OWNER'S REPRESENTATIVE AND OBTAIN DIRECTION AS TO THE APPROPRIATE ACTION(S) TO BE TAKEN.
5. DISCONNECTION OF SERVICES AND SYSTEMS SUPPL YING UTILITIES TO BE ABANDONED OR DEMOLISHED SHALL BE COMPLETED PRIOR TO OTHER SITE DEMOLITION IN FULL COMPLIANCE WITH APPLICABLE CODES, REGULATIONS, AND THE REQUIREMENTS OF UTILITY PURVEYORS HAVING JURISDICTION. THE CONTRACTOR SHALL BE RESPONSIBLE FOR COORDINATION WITH THE UTILITY PURVEYORS, PAYMENT OF ASSOCIATED FEES AND PROCUREMENT OF ALL NECESSARY PERMITS.
6. PRIOR TO REMOVAL OF MATERIALS OVER EXISTING UTILITY SYSTEMS, THE CONTRACTOR SHALL DOCUMENT EXISTING CONDITIONS AND, IF AT VARIANCE WITH CONDITIONS AS REPRESENTED ON THE PLANS, NOTIFY THE OWNER'S REPRESENTATIVE AND OBTAIN DIRECTIONS AS TO THE APPROPRIATE ACTION(S) TO BE TAKEN.
7. THE CONTRACTOR SHALL BACKFILL EXCAVATED AREAS WITH APPROVED MATERIALS I CLEAN FILL AS PER THE REQUIREMENTS OF VIRGINIA DEPARTMENT OF TRANSPORTATION (VDOT).
8. THE CONTRACTOR SHALL PROTECT AND PREVENT DAMAGE TO EXISTING ON-SITE UTILITY DISTRIBUTION FACILITIESTHAT ARE TO REMAIN. ACTIVE UTILITY DISTRIBUTION FACILITIES ENCOUNTERED DURING DEMOLITION AND/OR CONSTRUCTION ACTIVITIES SHALL BE SHUT OFF AT THE SERVICE MAIN WITH THE APROVAL OF THE OWNER'S REPRESENTATIVE.
9. DURING DEMOLITION AND/OR CONSTRUCTION ACTIVITIES, THE CONTRACTOR SHALL IMMEDIATELY NOTIFY THE OWNER'S REPRESENTATIVE UPON ENCOUNTERING ANY EXISTING UTILITIES AND/OR UTILITY SYSTEM STRUCTURES NOT SHOWN ON THESE PLANS. THE CONTRACTOR SHALL DOCUMENT THE SAME AND FORWARD THE INFORMATION TO THE RESIDENT ENGINEER I OWNER'S REPRESENTATIVE, AND OBTAIN DIRECTION AS TO THE APPROPRIATE ACTION(S) TO BE TAKEN.
10. THE CONTRACTOR OR APPLICANT SHALL WORK WITH THE CITY STAFF TO REUSE THE EXISTING, LEFTOVER, UNUSED, AND/OR DISCARDED BUILDING MATERIALS AS PART OF THE DEMOLITION PROCESS OR THE CONSTRUCTION DEBRIS MUST BE REMOVED TO AN APPROVED LANDFILL WITH ADEQUATE FREQUENCY IN ACCORDANCE WITH THE VIRGINIA STATE LITTER CONTROL ACT.

CONSTRUCTION NOTES

1. THE EXISTING UNDERGROUND UTILITIES SHOWN HEREON ARE BASED UPON AVAILABLE INFORMATION. THE CONTRACTOR SHALL BE RESPONSIBLE FOR DETERMINING THE EXACT LOCATION OF ALL UTILITIES BEFORE COMMENCING WORK AND FOR ANY DAMAGES WHICH MAY OCCUR BY HIS FAILURE TO LOCATE OR PRESERVE THESE UNDERGROUND UTILITIES. IF DURING CONSTRUCTION OPERATIONS, THE CONTRACTOR SHOULD ENCOUNTER UTILITIES OTHER THAN THOSE SHOWN ON THE PLANS, HE SHALL IMMEDIATELY NOTIFY THE ENGINEER AND TAKE NECESSARY ACTION AND PROPER STEPS TO PROTECT THE FACILITY AND ASSURE THE CONTINUATION OF -SERVICE.
2. THE CONTRACTOR SHALL DIG TEST PITS AS REQUIRED FOLLOWING NOTIFICATION AND MARKING OF ALL EXISTING UTILITIES TO VERIFY THE LOCATION AND DEPTH OF EXISTING UTILITIES TEST HOLES TO BE PERFORMED AT LEAST 30 DAYS PRIOR TO START OF CONSTRUCTION. ANY DISCREPANCIES ARE TO BE REPORTED IMMEDIATELY TO THE OWNER AND ENGINEER. REDEISGN AND APPROVAL BY REVIEWING AGENCIES SHALL BE OBTAINED, IF REQUIRED.
3. THE CONTRACTOR SHALL BE RESPONSIBLE FOR NOTIFYING THE OWNER AND THE ENGINEER OF ANY CHANGES OR CONDITIONS ATTACHED TO PERMITS OBTAINED FROM ANY AUTHORITY ISSUING PERMITS.
4. THE CONTRACTOR SHALL VISIT THE SITE AND SHALL VERIFY EXISTING CONDITIONS PRIOR TO STARTING CONSTRUCTION.
5. THE CONTRACTOR SHALL CLEAR THE SITE OF ALL TREES, BUILDINGS, FOUNDATIONS, ETC., WITHIN THE LIMITS OF CONSTRUCTION UNLESS OTHERWISE SPECIFIED, AND SHALL BE RESPONSIBLE FOR ENSURING THAT EXISTING UTILITIES ARE DISCONNECTED.
6. THE DEVELOPER SHALL PROVIDE OVER-LOT GRADING TO PROVIDE POSITIVE DRAINAGE AND PRECLUDE PONDING OF WATER.
7. ALL AREAS, ON OR OFF-SITE, WHICH ARE DISTURBED BY THIS CONSTRUCTION AND WHICH ARE NOT PAVED OR BUILT UPON, SHALL BE ADEQUATELY STABILIZED TO CONTROL EROSION AND SEDIMENTATION. THE MINIMUM ACCEPTABLE STABILIZATION SHALL CONSIST OF PERMANENT GRASS, SEED MIXTURE TO BE AS RECOMMENDED BY THE CITY AGENT. ALL SLOPES 3:1 AND GREATER SHALL BE SODDED AND PEGGED OF OTHERWISE STABILIZED IN A MANNER APPROVED BY THE CITY OF ALEXANDRIA.
8. EXISTING SEPTIC FIELDS, IF APPLICABLE, SHALL BE ABANDONED IN ACCORDANCE WITH VIRGINIA HEALTH DEPARTMENT STANDARDS AND SPECIFICATIONS.
9. ALL ABOVE GROUND UTILITIES SERVING THE SITE SHALL BE RELOCATED AS REQUIRED BY THE OWNING UTILITY COMPANIES. THE CONTRACTOR SHALL BE RESPONSIBLE FOR MAKING ALL ARRANGEMENTS AND COORDINATING ALL WORK REQUIRED FOR THE NECESSARY RELOCATIONS.
10. PRIOR TO BEGINNING OF CONSTRUCTION, CONTRACTOR SHALL VERIFY FROM THE ARCHITECTURAL DRAWINGS ALL DIMENSIONS, DETAILS, AND TREATMENTS FOR THE PROPOSED BUILDINGS, WALKWAYS, AND OTHER PROPOSED CONSTRUCTION WHERE INDICATED ON THE PLANS.
11. THE CONTRACTOR IS TO VERIFY INVERT, SIZE, AND LOCAT~ON OF BUILDING UTILITY CONNECTIONS WITH THE MECHANICAL PLANS PRIOR TO PLACEMENT OF UNDERGROUND UTILITIES.
12. EXISTING BUILDINGS, FENCES AND OTHER EXISTING PHYSICAL FEATURES ARE TO BE REMOVED AS REQUIRED BY THE CONSTRUCTION.
13. EXISTING CONSTRUCTION SHALL BE REMOVED TO NEAREST JOINT. NEW CONSTRUCTION SHALL BE PROVIDED AS SHOWN AND ANY DAMAGED AREA SHALL BE REPAIRED TO MATCH CONDITIONS EXISTING PRIOR TO CONSTRUCTION OR TO THE SATISFACTION OF DIRECTOR, TRANSPORTATION AND ENVIRONMENTAL SERVICES.
14. ALL PRIVATE BUILDING CONNECTIONS ARE TO BE INSTALLED IN ACCORDANCE WITH THE CURRENT PLUMBING CODE.
15. TOPS OF EXISTING STRUCTURES WHICH REMAIN IN USE ARE TO BE ADJUSTED IN ACCORDANCE WITH THE GRADING PLAN. ALL PROPOSED STRUCTURE TOP ELEVATIONS ARE TO BE VERIFIED BY THE CONTRACTOR WITH THE SITE GRADING PLANS. IN CASE OF CONFLICT, THE GRADING PLAN SHALL SUPERSEDE PROFILE ELEVATIONS. MINOR ADJUSTMENTS TO MEET FINISHED GRADE ELEVATIONS, IF REQUIRED, SHALL BE MADE IN THE FIELD WITH THE APPROVAL OF SITE INSPECTOR OF THE DEPARTMENT OF TRANSPORTATION AND ENVIRONMENTAL SERVICES.
16. THE DESIGN, CONSTRUCTION, FIELD PRACTICES, AND METHODS SHALL CONFORM TO THE REQUIREMENTS SET FORTH BY THE CITY OF ALEXANDRIA ZONING ORDINANCE AND DESIGN AND CONSTRUCTION STANDARDS MANUAL. FAILURE TO COMPLY WITH THE CODE, APPLICABLE MANUALS, AND PROVISIONS OF THE CONSTRUCTION AND ESCROW AGREEMENTS OR THE PERMITS SHALL BE DEEMED A VIOLATION.
17. THE APPROVAL OF THESE PLANS SHALL IN NO WAY RELIEVE THE OWNER/DEVELOPER OR HIS AGENT OF ANY LEGAL RESPONSIBILITIES WHICH MAY BE REQUIRED BY THE CODE OF VIRGINIA OR ANY ORDINANCE ENACTED BY THE CITY OF ALEXANDRIA.

ARCHAEOLOGY NOTES:

1. THE APPLICANT/DEVELOPER SHALL CALL ALEXANDRIA ARCHAEOLOGY IMMEDIATELY (703-838-4399) IF ANY BURIED STRUCTURAL REMAINS (WALL FOUNDATIONS, WELLS, PRIVIES, CISTERNS, ETC.) OR CONCENTRATIONS OF ARTIFACTS ARE DISCOVERED DURING DEVELOPMENT. WORK MUST CEASE IN THE AREA OF THE DISCOVERY UNTIL A CITY ARCHAEOLOGIST COMES TO THE SITE AND RECORDS THE FINDS.
2. THE APPLICANT/DEVELOPER SHALL NOT ALLOW ANY METAL DETECTION OR ARTIFACT COLLECTION TO BE CONDUCTED ON THE PROPERTY, UNLESS AUTHORIZED BY ALEXANDRIA ARCHAEOLOGY.

APPROVED
SPECIAL USE PERMIT NO. DSUP 2016-0006

DEPARTMENT OF PLANNING & ZONING

DIRECTOR DATE

DEPARTMENT OF TRANSPORTATION & ENVIRONMENTAL SERVICES

SITE PLAN No.

DIRECTOR DATE

CHAIRMAN, PLANNING COMMISSION DATE

DATE RECORDED

INSTRUMENT NO. DEED BOOK NO. PAGE NO.

Michael Baker
INTERNATIONAL
3601 EISENHOWER AVENUE
SUITE 600
ALEXANDRIA, VIRGINIA 22310
TEL. 703.960.8800

Project Title

POTOMAC YARD PARK

COMMONWEALTH OF VIRGINIA
JOHN CRAIG FENNELL
Lic. No. 826
LANDSCAPE ARCHITECT

No.	Revision	Date
1.		
2.		
3.		
4.		
5.		
6.		
7.		
8.		

Drawn by: JCF Checked by: JCF

Scale: AS NOTED Date: 26 FEB 2016

Issued for

City of Alexandria Department of Project Implementation

Drawing Title

CITY NOTES

Drawing Number

L-108

Project Number 151053

CONSTRUCTION NOTES CONTINUED

18. CONSTRUCTION STAKEOUT SHALL BE UNDER THE DIRECT SUPERVISION OF A LICENSED LAND SURVEYOR IN THE COMMONWEAL TH OF VIRGINIA.
19. THE CONTRACTOR IS REFFRRED TO STRUCTURAL, GEOTECHNICAL, MECHANICAL, AND ARCHITECTURAL PLANS FOR FOUNDATION TREATMENT INCLUDING, BUT NOT LIMITED TO, SHEETING AND SHORING FOR BUILDING EXCAVATION, WATERPROFFING FOR FILL AGAINST BUILDINGS, LOCATION OF MECHANICAL EQUIPMENT, AND CONNECTIONS AT THE FACES OF BUILDINGS.
20. SMOOTH GRADE SHALL BE MAINTAINED FROM THE CENTERLINE OF THE EXISTING ROAD TO THE PROPOSED ENTRANCE AND/OR CURB & GUTIER TO PRECLUDE THE FORMING OF FALSE GUTIER AND/OR PONDING OF WATER ON THE ROADWAY.
21. THE CONTRACTOR SHALL BE RESPONSIBLE FOR MAKING A SMOOTH TRANSITION TO EXISTING CURB AND SIDEWALKS, IF APPLICABLE.
22. THE CALIFORNIA BEARING RATIO (CSR) VALUES OF IN-SITU MATERIALS SHALL BE DETERMINED BY FIELD AND/OR LABORATORY TESTS FOR ACTUAL DETERMINATION OF REQUIRED THICKNESSES OF SURFACE, BASE, SUB-BASE, AND SUB GRADE MATERIALS. THE PAVEMENT SECTION SHALL BE DESIGNED BY A GEOTECHNICAL /LICENSED PROPOFESSIONAL ENGINEER TO THE SATISFACTION OF DIRECTOR, TRANSPORTATION AND ENVIRONMENTAL SERVICES FOR ALL PAVEMENTS INCLUDING EMERGENCY VEHICLE EASEMENT (EVE) TO SUPPORT H-20 LOADING. IN THE CASE OF PAVEMENT PATCHES, PAVEMENT SECTION MUST MEET OR EXCEED EXISTING SECTION.
23. THE THICKNESSES OF SUB-BASE, BASE, AND WEARING COURSE SHALL BE DESIGNED USING "CALIFORNIA METHOD" AS SET FORTH ON PAGE 3-76 OF THE SECOND EDITION OF A BOOK ENTITLED, "DATA BOOK FOR CIVIL ENGINEERS, VOLUME ONE, DESIGN" WRITIEN BY ELWYN E. SEELYE. AN ALTERNATE PAVEMENT SECTION DESIGNED TO THE SATISFACTION OF DIRECTOR, TRANSPORTATION AND ENVIRONMENTAL SERVICES FOR ALL PAVEMENTS INCLUDING EMERGENCY VEHICLE EASEMENT (EVE) TO SUPPORT H-20 LOADING BASED ON CSR AND VIRGINIA DEPARTMENT OF TRANSPORTATION (VDOT) METHOD (VASWANI METHOD) AND STANDARD MATERIAL SPECIFICATIONS SHALL BE ACCEPTABLE.
24. EMERGENCY VEHICLE EASEMENTS (EVE) AND AMERICAN WITH DISTABILITY (ADA) ACCESSIBLE PARKING SPACES MUST BE DELINEATED WITH PAVEMENT MARKINGS PER THE CITY OF ALEXANDRIA STANDARD SIGNAGE AND AMERICAN WITH DISABILITIES (ADA) REQUIREMENTS.
25. ALL STRIPING SHALL MEET THE REQUIRMENTS OF MANUAL ON UNIFORM TRAFFIC CONTROL DEVICES (MUTCD) STANDARDS (LATEST EDITION) AND SHALL BE THERMOPLASTIC UNLESS OTHERWISE SPECIFIED.
26. ALL EARTHWORK OPERATIONS ARE TO BE PERFORMED UNDER THE FULL TIME, ON-SITE SUPERVISION OF A REGISTERED GEOTECHNICAL ENGINEER WITH GEOTECHNICAL TESTING IN ACCORDANCE WITH CONSTRUCTION SPECIFICATIONS AND GEOTECHNICAL REPORT REQUIREMENTS.
27. THE CONTRACTORS SHALL NOT CAUSE OR PERMIT VEHICLES TO IDLE FOR MORE THAN 10 MINUTES WHEN PARKED.
28. UNLESS OTHERWISE APPROVED THE CONTRACTOR SHALL PROVIDE THERMOPLASTIC LADDER STYLE I STANDARD PEDESTRIAN CROSS WALKS AT ALL CROSSINGS AT THE PROPOSED DEVELOPMENT, WHICH MUST BE DESIGNED TO THE SATISFACTION OF THE DIRECTOR, TRANSPORTATION AND ENVIRONMENTAL SERVICES. THE DESIGN OF LADDER STYLE OR STANDARD PEDESTRIAN CROSS WALK SHALL BE EVALUATED ON A CASE BY CASE BASIS AND SHALL COMPLY WITH THE REQUIREMENTS OF POLICY MANUAL SECTION 30.18, PEDESTRIAN CROSSWALKS, JULY 13, 2006. A COPY OF THE POLICY MANUAL CAN BE OBTAINED FROM YON LAMBERT, BICYCLE AND PEDESTRIAN COORDINATOR I TRANSPORTATION PLANNER, TELEPHONE (703) 7 46-4081.

RESOURCE PROTECTION AREA NOTES

1. THE SUBJECT PROPERTY DOES NOT LIE WITHIN THE CITY OF ALEXANDRIA RESOURCE PROTECTION AREA (RPA) AND THERE ARE NO MAPPED RPA'S ON THIS PROPERTY.

FLOOD PLAIN NOTES

1. THE SITE DOES NOT LIE WITHIN 100-YEAR FLOOD PLAIN WATER SURFACE ELEVATION (WSE) PER THE DEMARCATION OF THE CURRENT FLOOD INSURANCE RATE MAP (FIRM) PUBLISHED BY FEDERAL EMERGENCY MANAGEMENT AGENCY (FEMA).

RODENT ABATEMENT NOTE

PRIOR TO THE ISSUANCE OF A DEMOLITION PERMIT OR LAND DISTURBANCE PERMIT, A RODENT ABATEMENT PLAN SHALL BE SUBMITIED TO THE CITY OF ALEXANDRIA BUILDING AND FIRE CODE ADMINISTRATION THAT WILL OUTLINE STEPS THAT WILL BE TAKEN TO PREVENT THE SPREAD OF RODENTS FROM THE CONSTRUCTION SITE TO THE SURROUNDING COMMUNITY AND SEWERS. THE CONTRACTOR CAN CONTACT ALEXANDRIA BUILDING AND FIRE CODE ADMINISTRATION DEPARTMENT AT (703) 838-4644 OR (703) 746-4200 FOR ANY QUESTIONS OR ADDITIONAL INFORMATION.

MOSQUITO CONTROL NOTES

1. SINCE STORM WATER MANAGEMENT (SWM) AND BEST MANAGEMENT PRACTICE (BMP) SYSTEMS THAT HOLD WATER FOR MORE THEN 5 DAYS BETWEEN THE MONTHS OF MAY -OCTOBER HAVE THE POTENTIAL TO CAUSE MOSQUITO BREEDING HABITATS; THEREFORE, SUCH BMPs SHALL BE TREATED WITH A REGISTERED MOSQUITO LARVAL CONTROL PRODUCT. ALL LABELS SHOULD BE FOLLOWED FOR APPLICATION RATES AND AMOUNTS.
2. SINCE EXCESSIVE VEGETATION IN EXISTING BMPs ALSO INCREASES THE POTENTIAL FOR MOSQUITO PROBLEMS; THEREFORE, VEGETATION SHALL BE CONTROLLED AND CUT TO REDUCE MOSQUITO BREEDING.
3. CONTACT THE CITY OF ALEXANDRIA ENVIRONMENTAL HEALTH VECTOR BORNE ILLNESS PROGRAM (703-838-4400 EXT. 326,327) FOR QUESTIONS OR TREATMENT ASSISTANCE.

ARCHAEOLOGY NOTES:
1. THE APPLICANT/DEVELOPER SHALL CALL ALEXANDRIA ARCHAEOLOGY IMMEDIATELY (703-838-4399) IF ANY BURIED STRUCTURAL REMAINS (WALL FOUNDATIONS, WELLS, PRIVIES, CISTERNS, ETC.) OR CONCENTRATIONS OF ARTIFACTS ARE DISCOVERED DURING DEVELOPMENT. WORK MUST CEASE IN THE AREA OF THE DISCOVERY UNTIL A CITY ARCHAEOLOGIST COMES TO THE SITE AND RECORDS THE FINDS.
2. THE APPLICANT/DEVELOPER SHALL NOT ALLOW ANY METAL DETECTION OR ARTIFACT COLLECTION TO BE CONDUCTED ON THE PROPERTY, UNLESS AUTHORIZED BY ALEXANDRIA ARCHAEOLOGY.

APPROVED
SPECIAL USE PERMIT NO. DSUP 2016-0006
DEPARTMENT OF PLANNING & ZONING

DIRECTOR DATE
DEPARTMENT OF TRANSPORTATION & ENVIRONMENTAL SERVICES
SITE PLAN No.

DIRECTOR DATE

CHAIRMAN, PLANNING COMMISSION DATE

DATE RECORDED

INSTRUMENT NO. DEED BOOK NO. PAGE NO.

Michael Baker
INTERNATIONAL
3601 EISENHOWER AVENUE
SUITE 600
ALEXANDRIA, VIRGINIA 22310
TEL. 703.960.8800

Project Title
POTOMAC YARD PARK

COMMONWEALTH OF VIRGINIA
JOHN CRAIG FENNELL
Lic. No. 826
LANDSCAPE ARCHITECT

No.	Revision	Date
1.		
2.		
3.		
4.		
5.		
6.		
7.		
8.		

Drawn by: JCF Checked by: JCF
Scale: AS NOTED Date: 26 FEB 2016
Issued for
City of Alexandria Department of Project Implementation

Drawing Title
CITY NOTES

Drawing Number
L-109

Project Number 151053

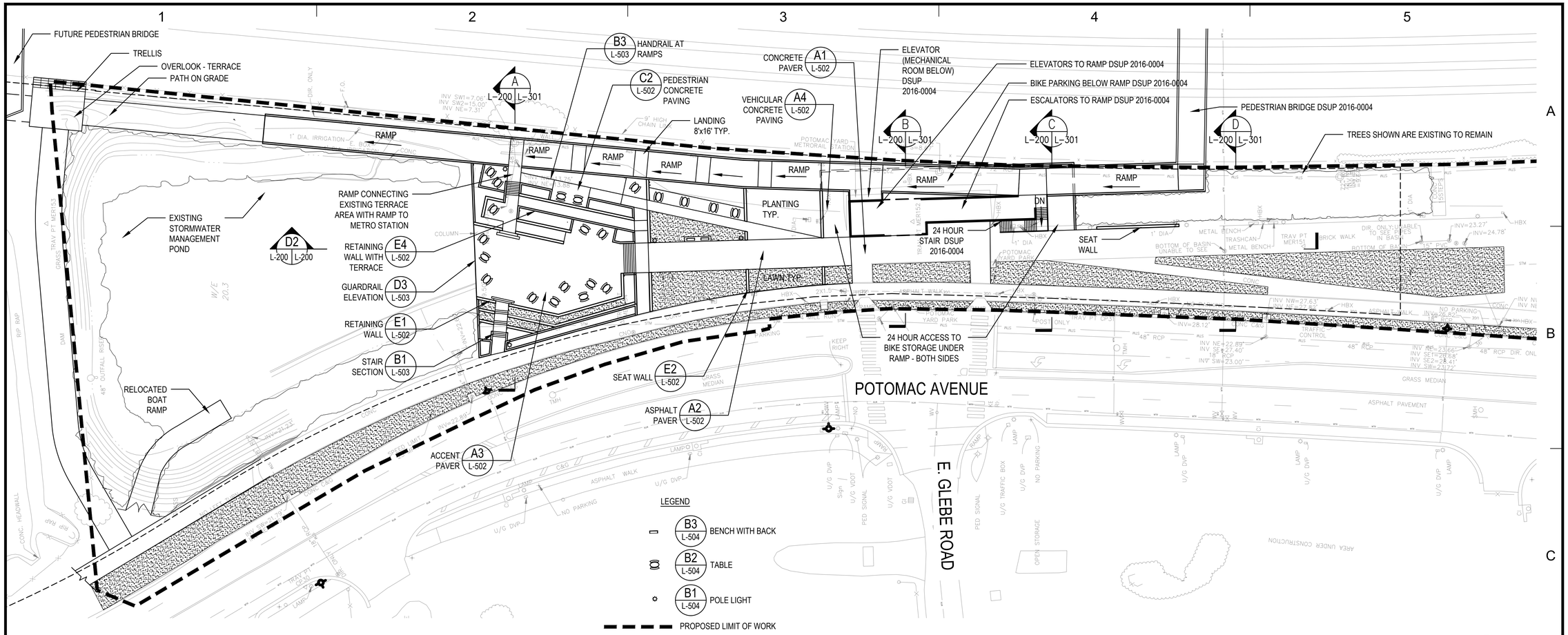

D1 PLAN

SCALE: 1"=30' REF: L-200

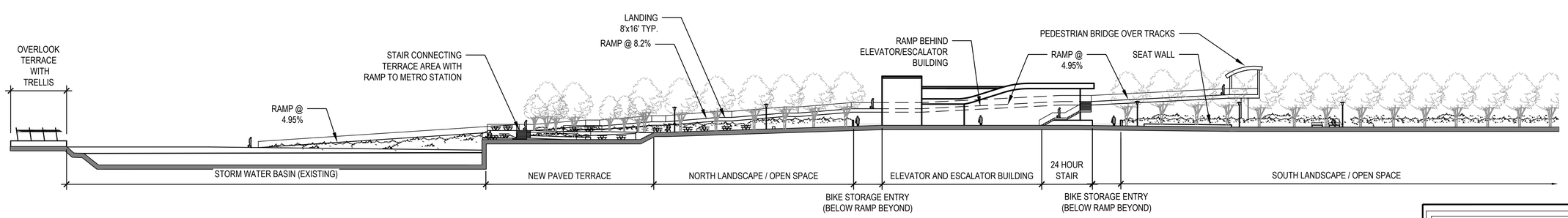

D2 ELEVATION LOOKING EAST

SCALE: 1"=30' REF: L-200

ARCHAEOLOGY NOTES:

1. THE APPLICANT/DEVELOPER SHALL CALL ALEXANDRIA ARCHAEOLOGY IMMEDIATELY (703-838-4399) IF ANY BURIED STRUCTURAL REMAINS (WALL FOUNDATIONS, WELLS, PRIVIES, CISTERNS, ETC.) OR CONCENTRATIONS OF ARTIFACTS ARE DISCOVERED DURING DEVELOPMENT. WORK MUST CEASE IN THE AREA OF THE DISCOVERY UNTIL A CITY ARCHAEOLOGIST COMES TO THE SITE AND RECORDS THE FINDS.
2. THE APPLICANT/DEVELOPER SHALL NOT ALLOW ANY METAL DETECTION OR ARTIFACT COLLECTION TO BE CONDUCTED ON THE PROPERTY, UNLESS AUTHORIZED BY ALEXANDRIA ARCHAEOLOGY.

APPROVED
SPECIAL USE PERMIT NO. DSUP 2016-0006
DEPARTMENT OF PLANNING & ZONING
DIRECTOR DATE
DEPARTMENT OF TRANSPORTATION & ENVIRONMENTAL SERVICES
SITE PLAN No.
DIRECTOR DATE
CHAIRMAN, PLANNING COMMISSION DATE
DATE RECORDED
INSTRUMENT NO. DEED BOOK NO. PAGE NO.

Michael Baker INTERNATIONAL
3601 EISENHOWER AVENUE
SUITE 600
ALEXANDRIA, VIRGINIA 22310
TEL. 703.960.8800

Project Title
POTOMAC YARD PARK

COMMONWEALTH OF VIRGINIA
JOHN CRAIG FENNELL
Lic. No. 826
LANDSCAPE ARCHITECT

No.	Revision	Date
1.		
2.		
3.		
4.		
5.		
6.		
7.		
8.		

Drawn by: WDU Checked by: JCF
Scale: AS NOTED Date: 26 FEB 2016

Issued for
City of Alexandria Department of Project Implementation

Drawing Title
MATERIALS PLAN AND ELEVATION

Drawing Number
L-200

Project Number 151053

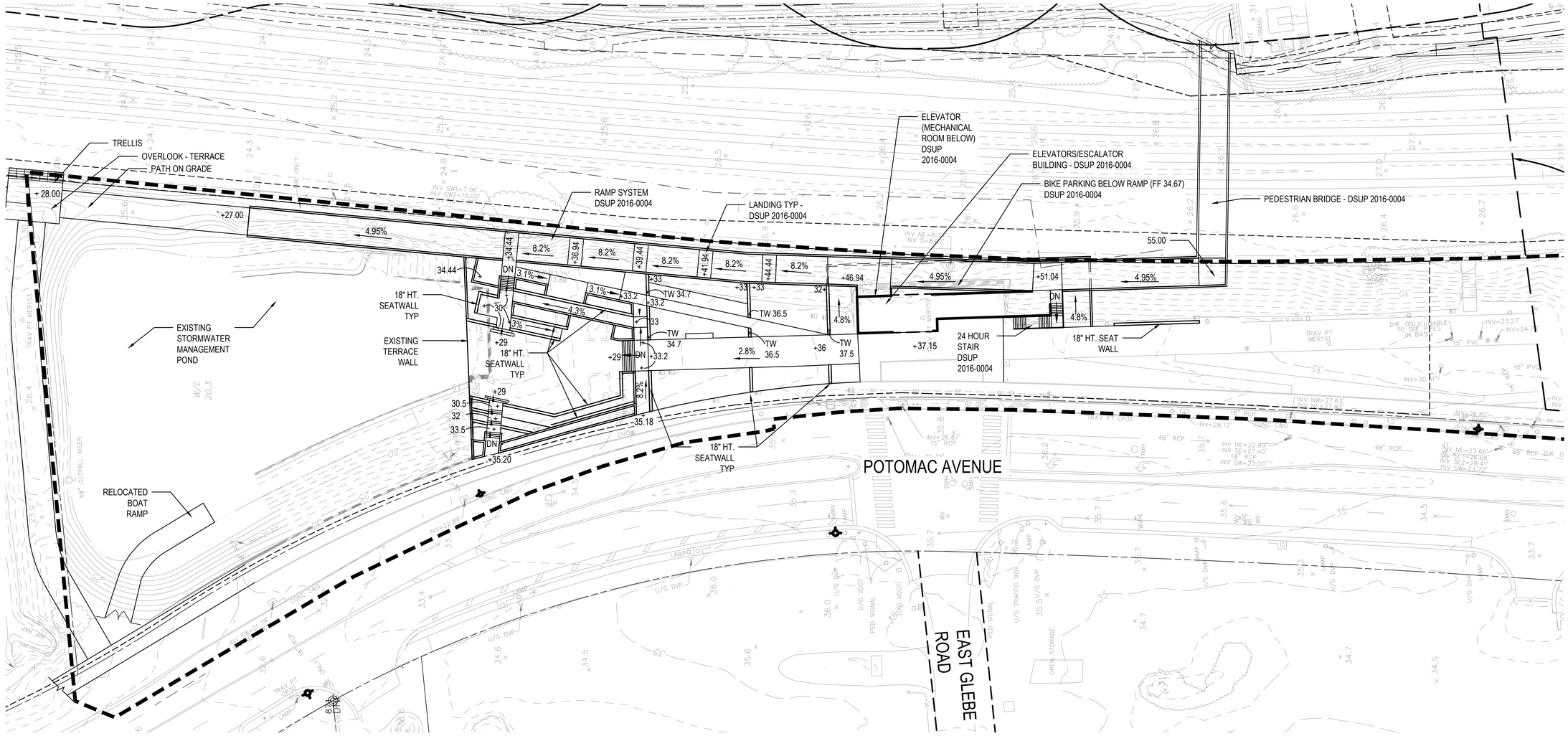

SCALE: 1"=30'-0"

30 15 0 30

WMATA LDP
COORDINATE SYSTEM

ARCHAEOLOGY NOTES:
1. THE APPLICANT/DEVELOPER SHALL CALL ALEXANDRIA ARCHAEOLOGY IMMEDIATELY (703-838-4399) IF ANY BURIED STRUCTURAL REMAINS (WALL FOUNDATIONS, WELLS, PRIVIES, CISTERNS, ETC.) OR CONCENTRATIONS OF ARTIFACTS ARE DISCOVERED DURING DEVELOPMENT. WORK MUST CEASE IN THE AREA OF THE DISCOVERY UNTIL A CITY ARCHAEOLOGIST COMES TO THE SITE AND RECORDS THE FINDS.
2. THE APPLICANT/DEVELOPER SHALL NOT ALLOW ANY METAL DETECTION OR ARTIFACT COLLECTION TO BE CONDUCTED ON THE PROPERTY, UNLESS AUTHORIZED BY ALEXANDRIA ARCHAEOLOGY.

APPROVED
SPECIAL USE PERMIT NO. DSUP 2016-0006
DEPARTMENT OF PLANNING & ZONING

DIRECTOR DATE
DEPARTMENT OF TRANSPORTATION & ENVIRONMENTAL SERVICES
SITE PLAN No.

DIRECTOR DATE

CHAIRMAN, PLANNING COMMISSION DATE

DATE RECORDED

INSTRUMENT NO. DEED BOOK NO. PAGE NO.

Michael Baker
INTERNATIONAL
3601 EISENHOWER AVENUE
SUITE 600
ALEXANDRIA, VIRGINIA 22310
TEL. 703.960.8800

Project Title
POTOMAC YARD PARK

COMMONWEALTH OF VIRGINIA
JOHN CRAIG FENNELL
Lic. No. 826
LANDSCAPE ARCHITECT

No.	Revision	Date
1.		
2.		
3.		
4.		
5.		
6.		
7.		
8.		

Drawn by: JCF Checked by: JCF
Scale: AS NOTED Date: 26 FEB 2016
Issued for
City of Alexandria
Department of Project
Implementation

Drawing Title
GRADING
PLAN

Drawing Number
L-201

Project Number 151053

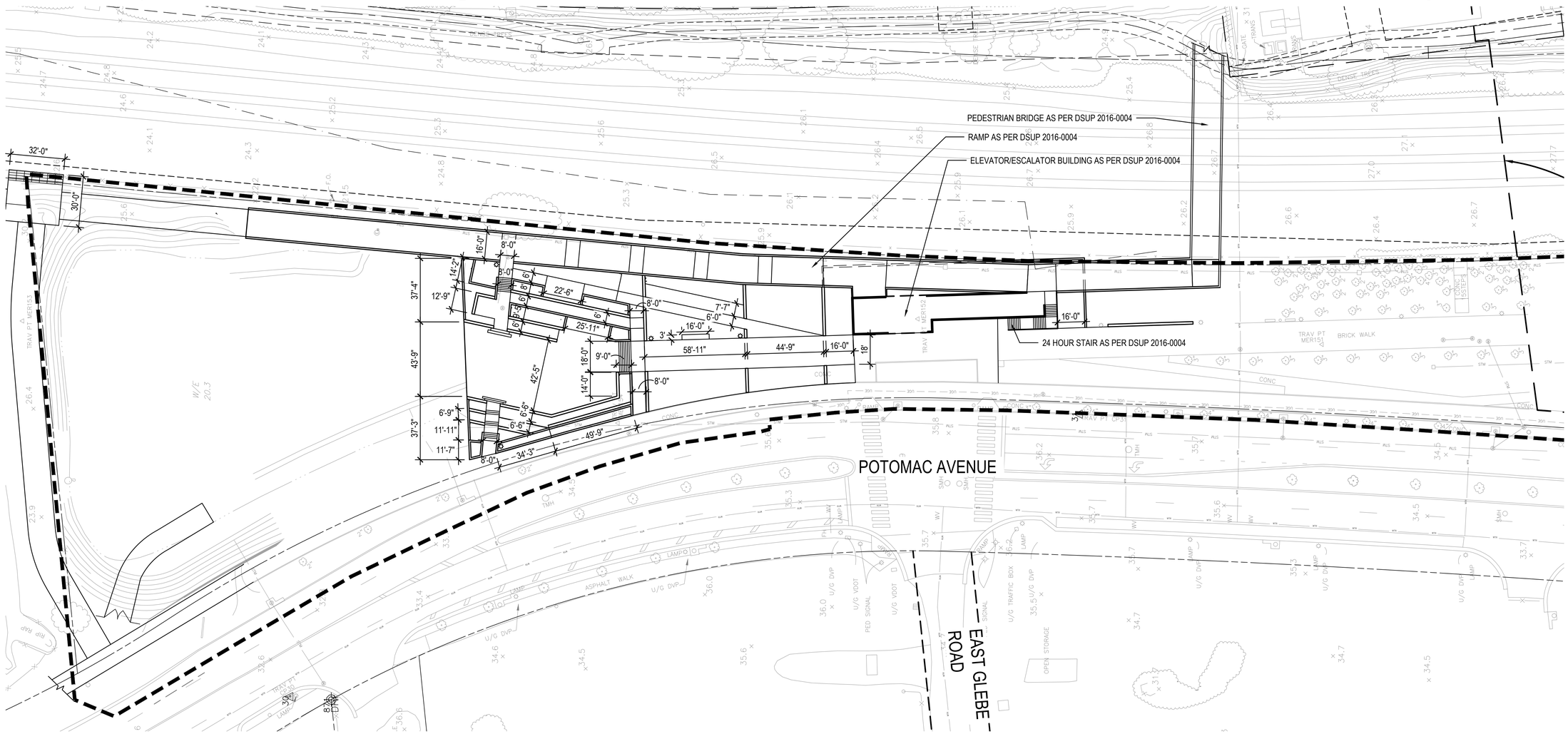

30 15 0 30

SCALE: 1"=30'-0"

N

WMATA LDP
COORDINATE SYSTEM

ARCHAEOLOGY NOTES:
1. THE APPLICANT/DEVELOPER SHALL CALL ALEXANDRIA ARCHAEOLOGY IMMEDIATELY (703-838-4399) IF ANY BURIED STRUCTURAL REMAINS (WALL FOUNDATIONS, WELLS, PRIVIES, CISTERNS, ETC.) OR CONCENTRATIONS OF ARTIFACTS ARE DISCOVERED DURING DEVELOPMENT. WORK MUST CEASE IN THE AREA OF THE DISCOVERY UNTIL A CITY ARCHAEOLOGIST COMES TO THE SITE AND RECORDS THE FINDS.
2. THE APPLICANT/DEVELOPER SHALL NOT ALLOW ANY METAL DETECTION OR ARTIFACT COLLECTION TO BE CONDUCTED ON THE PROPERTY, UNLESS AUTHORIZED BY ALEXANDRIA ARCHAEOLOGY.

APPROVED
SPECIAL USE PERMIT NO. DSUP 2016-0006

DEPARTMENT OF PLANNING & ZONING

DIRECTOR DATE

DEPARTMENT OF TRANSPORTATION & ENVIRONMENTAL SERVICES

SITE PLAN No.

DIRECTOR DATE

CHAIRMAN, PLANNING COMMISSION DATE

DATE RECORDED

INSTRUMENT NO. DEED BOOK NO. PAGE NO.

Michael Baker
INTERNATIONAL
3601 EISENHOWER AVENUE
SUITE 600
ALEXANDRIA, VIRGINIA 22310
TEL. 703.960.8800

Project Title

POTOMAC YARD PARK

COMMONWEALTH OF VIRGINIA
JOHN CRAIG FENNELL
Lic. No. 826
LANDSCAPE ARCHITECT

No.	Revision	Date
1.		
2.		
3.		
4.		
5.		
6.		
7.		
8.		

Drawn by: WDU Checked by: JCF

Scale: AS NOTED Date: 26 FEB 2016

Issued for

City of Alexandria Department of Project Implementation

Drawing Title

LAYOUT PLAN

Drawing Number

L-202

Project Number 151053

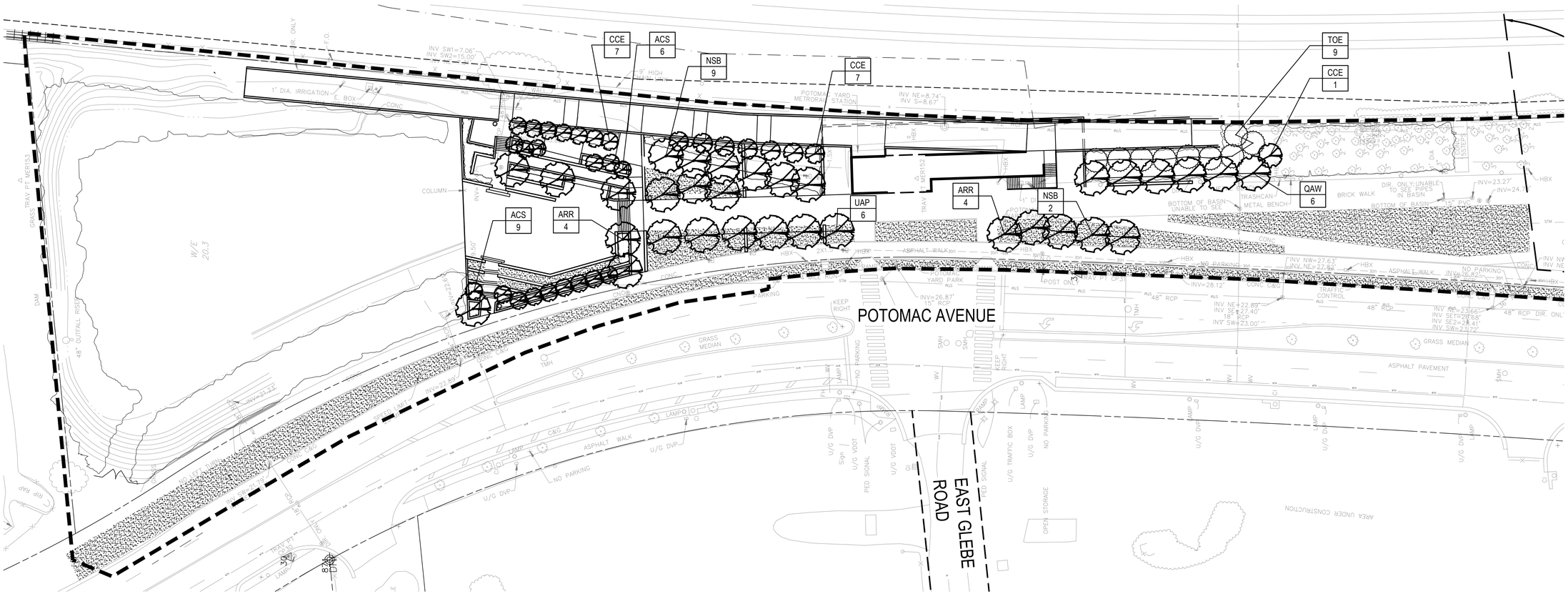

30 15 0 30

SCALE: 1"=30'-0"

N

WMATA LDP
COORDINATE SYSTEM

LEGEND

- E2 / L-501 — SHADE TREE PLANTING
- E2 / L-501 — ORNAMENTAL TREE PLANTING
- E2 / L-501 — EVERGREEN TREE PLANTING
- C3 / L-501 — TURF PLANTING
- B2 / L-501 — GROUNDCOVER

PLANT SCHEDULE

TREES

QTY	KEY	BOTANICAL NAME	COMMON NAME	SIZE	CROWN COVERAGE ALLOWANCE (SF)	OVERALL CANOPY COVERAGE (SF)	REMARKS
8	ARR	Acer rubum 'Red Sunset'	Red Sunset Red Maple	2" cal	1250	10,000	B&B, full uniform crown, symmetrical branching, full specimen
11	NSB	Nyssa sylvatica	Black Gum	2" cal	1250	13,750	B&B, full uniform crown, symmetrical branching, full specimen
6	QAW	Quercus alba	White Oak	2" cal	1250	7,500	B&B, full uniform crown, symmetrical branching, full specimen
6	UAP	Ulmus americana 'Princeton'	Princeton Elm	2" cal	1250	7,500	B&B, full uniform crown, symmetrical branching, full specimen
						38,750	**SUBTOTAL**

ORNAMENTAL TREES

QTY	KEY	BOTANICAL NAME	COMMON NAME	SIZE	CROWN COVERAGE ALLOWANCE (SF)	OVERALL CANOPY COVERAGE (SF)	REMARKS
15	ACS	Amelanchier canadensis	Serviceberry	8-10' ht	500	7,500	B&B, full uniform crown, symmetrical branching, full specimen
15	CCE	Cercis candadensis	Eastern Redbud	8-10' ht	500	7,500	B&B, full uniform crown, symmetrical branching, full specimen
						15,000	**SUBTOTAL**

EVERGREEN TREES

QTY	KEY	BOTANICAL NAME	COMMON NAME	SIZE	CROWN COVERAGE ALLOWANCE (SF)	OVERALL CANOPY COVERAGE (SF)	REMARKS
9	TOE	Thuja occidentalis	Eastern Arborvitae	8-10' ht	500	4,500	B&B, speciman quality, strong central leader
						4,500	**SUBTOTAL**

SHRUBS

QTY	KEY	BOTANICAL NAME	COMMON NAME	SIZE	CROWN COVERAGE ALLOWANCE (SF)	OVERALL CANOPY COVERAGE (SF)	REMARKS
							SHRUB SELECTION TBD

HERBACEOUS PLANTS

QTY	KEY	BOTANICAL NAME	COMMON NAME	SIZE	CROWN COVERAGE ALLOWANCE (SF)	OVERALL CANOPY COVERAGE (SF)	REMARKS
							HERBACEOUS PLANT SELECTION TBD

ORNAMENTAL GRASSES

QTY	KEY	BOTANICAL NAME	COMMON NAME	SIZE	CROWN COVERAGE ALLOWANCE (SF)	OVERALL CANOPY COVERAGE (SF)	REMARKS
							ORNAMENTAL GRASS SELECTION TBD

SHRUBS, HERBACEOUS PLANTS, AND ORNAMENTAL GRASSES TO BE SELECTED FROM EXISTING PARK PLANT LIST OR COORDINATED WITH CITY STAFF.

ARCHAEOLOGY NOTES:
1. THE APPLICANT/DEVELOPER SHALL CALL ALEXANDRIA ARCHAEOLOGY IMMEDIATELY (703-838-4399) IF ANY BURIED STRUCTURAL REMAINS (WALL FOUNDATIONS, WELLS, PRIVIES, CISTERNS, ETC.) OR CONCENTRATIONS OF ARTIFACTS ARE DISCOVERED DURING DEVELOPMENT. WORK MUST CEASE IN THE AREA OF THE DISCOVERY UNTIL A CITY ARCHAEOLOGIST COMES TO THE SITE AND RECORDS THE FINDS.
2. THE APPLICANT/DEVELOPER SHALL NOT ALLOW ANY METAL DETECTION OR ARTIFACT COLLECTION TO BE CONDUCTED ON THE PROPERTY, UNLESS AUTHORIZED BY ALEXANDRIA ARCHAEOLOGY.

APPROVED
SPECIAL USE PERMIT NO. DSUP 2016-0006
DEPARTMENT OF PLANNING & ZONING
DIRECTOR DATE
DEPARTMENT OF TRANSPORTATION & ENVIRONMENTAL SERVICES
SITE PLAN No.
DIRECTOR DATE
CHAIRMAN, PLANNING COMMISSION DATE
DATE RECORDED
INSTRUMENT NO. DEED BOOK NO. PAGE NO.

Michael Baker
INTERNATIONAL
3601 EISENHOWER AVENUE
SUITE 600
ALEXANDRIA, VIRGINIA 22310
TEL. 703.960.8800

Project Title
POTOMAC YARD PARK

COMMONWEALTH OF VIRGINIA
JOHN CRAIG FENNELL
Lic. No. 826
LANDSCAPE ARCHITECT

No.	Revision	Date
1.		
2.		
3.		
4.		
5.		
6.		
7.		
8.		

Drawn by: BDC Checked by: JCF
Scale: AS NOTED Date: 26 FEB 2016
Issued for
City of Alexandria Department of Project Implementation

Drawing Title
PLANTING PLAN

Drawing Number
L-203

Project Number 151053

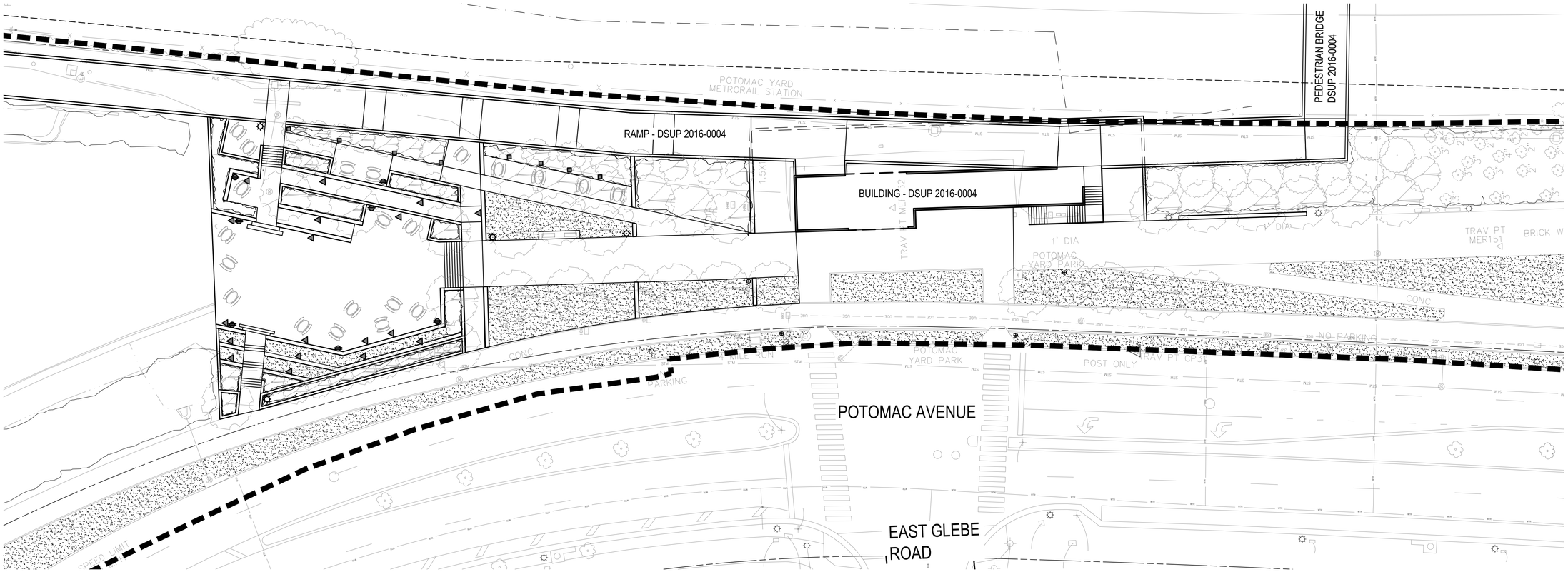

20 10 0 20

SCALE: 1"=20'-0"

N

WMATA LDP
COORDINATE SYSTEM

LEGEND

- B1 / L-504 — AVALON POLE LIGHT
- BOLLARD LIGHTING
- WALL MOUNTED LIGHTING
- EXTERIOR ELECTRIAL SERVICE (GFCI WITH WATERPROOF COVER OR INTEGRATED INTO WALL OR PIER)
- EXISTING POLE LIGHT
- PEDESTRIAN / CYCLIST WARNING SIGNAGE IN CONFORMANCE WITH CITY OF ALEXANDRIA SIGNAGE STANDARDS

ARCHAEOLOGY NOTES:
1. THE APPLICANT/DEVELOPER SHALL CALL ALEXANDRIA ARCHAEOLOGY IMMEDIATELY (703-838-4399) IF ANY BURIED STRUCTURAL REMAINS (WALL FOUNDATIONS, WELLS, PRIVIES, CISTERNS, ETC.) OR CONCENTRATIONS OF ARTIFACTS ARE DISCOVERED DURING DEVELOPMENT. WORK MUST CEASE IN THE AREA OF THE DISCOVERY UNTIL A CITY ARCHAEOLOGIST COMES TO THE SITE AND RECORDS THE FINDS.
2. THE APPLICANT/DEVELOPER SHALL NOT ALLOW ANY METAL DETECTION OR ARTIFACT COLLECTION TO BE CONDUCTED ON THE PROPERTY, UNLESS AUTHORIZED BY ALEXANDRIA ARCHAEOLOGY.

APPROVED
SPECIAL USE PERMIT NO. DSUP 2016-0006
DEPARTMENT OF PLANNING & ZONING

DIRECTOR DATE

DEPARTMENT OF TRANSPORTATION & ENVIRONMENTAL SERVICES
SITE PLAN No. _____

DIRECTOR DATE

CHAIRMAN, PLANNING COMMISSION DATE

DATE RECORDED

INSTRUMENT NO. DEED BOOK NO. PAGE NO.

Michael Baker
INTERNATIONAL
3601 EISENHOWER AVENUE
SUITE 600
ALEXANDRIA, VIRGINIA 22310
TEL. 703.960.8800

Project Title
POTOMAC YARD PARK

COMMONWEALTH OF VIRGINIA
JOHN CRAIG FENNELL
Lic. No. 826
LANDSCAPE ARCHITECT

No.	Revision	Date
1.		
2.		
3.		
4.		
5.		
6.		
7.		
8.		

Drawn by: JCF Checked by: JCF
Scale: AS NOTED Date: 26 FEB 2016

Issued for
City of Alexandria Department of Project Implementation

Drawing Title
LIGHTING AND SIGNAGE PLAN

Drawing Number
L-204

Project Number 151053

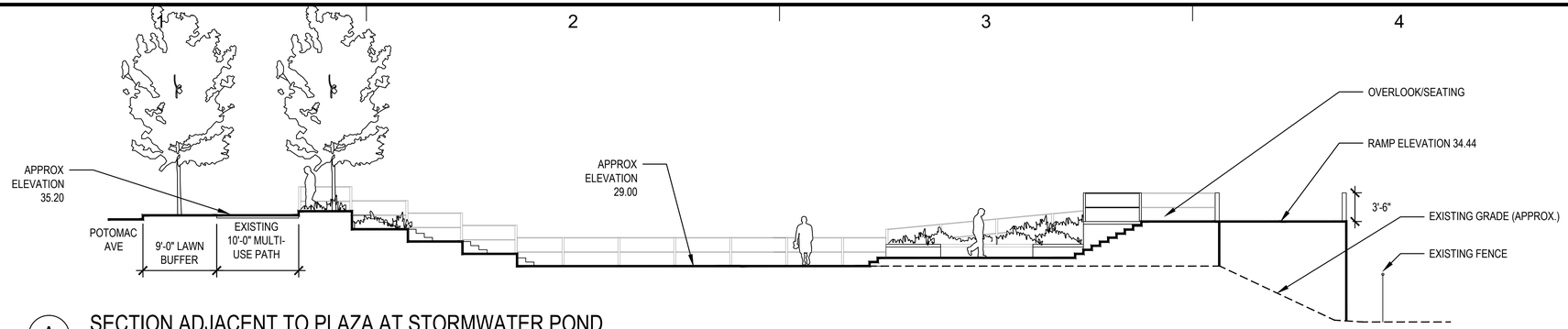

A SECTION ADJACENT TO PLAZA AT STORMWATER POND

SCALE: 1 1/2" = 1'-0" REF: L-301

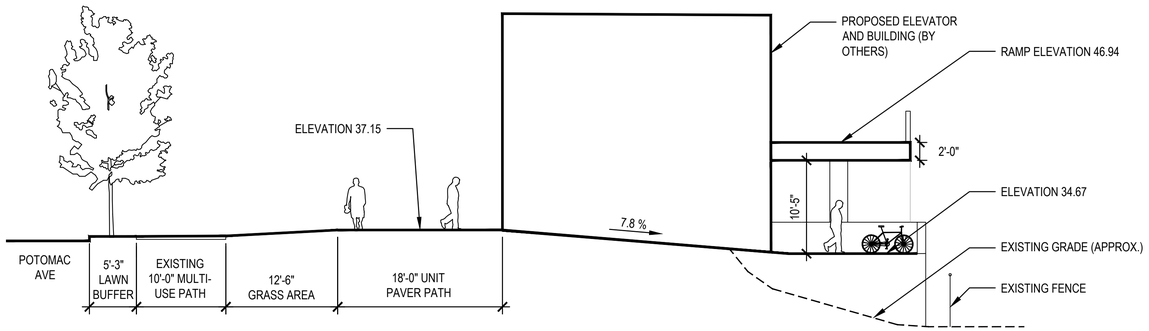

B SECTION AT ELEVATOR

SCALE: 1/8"= 1'-0" REF: L-301

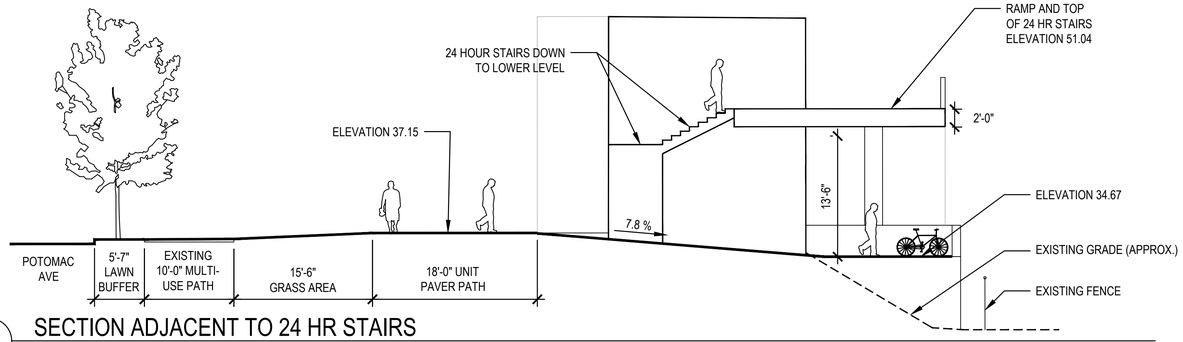

C SECTION ADJACENT TO 24 HR STAIRS

SCALE: 1 1/2" = 1'-0" REF: L-301

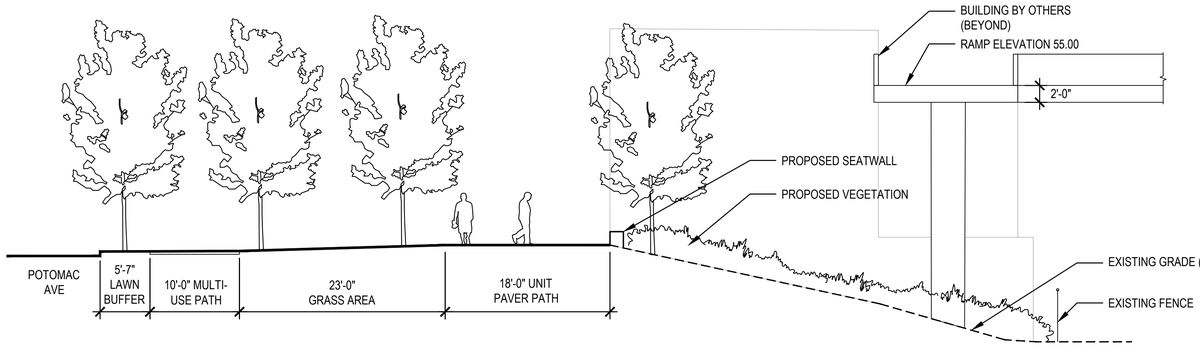

D SECTION ADJACENT TO PEDESTRIAN BRIDGE

SCALE: 1/8" = 1'-0" REF: L-200

ARCHAEOLOGY NOTES:
1. THE APPLICANT/DEVELOPER SHALL CALL ALEXANDRIA ARCHAEOLOGY IMMEDIATELY (703-838-4399) IF ANY BURIED STRUCTURAL REMAINS (WALL FOUNDATIONS, WELLS, PRIVIES, CISTERNS, ETC.) OR CONCENTRATIONS OF ARTIFACTS ARE DISCOVERED DURING DEVELOPMENT. WORK MUST CEASE IN THE AREA OF THE DISCOVERY UNTIL A CITY ARCHAEOLOGIST COMES TO THE SITE AND RECORDS THE FINDS.
2. THE APPLICANT/DEVELOPER SHALL NOT ALLOW ANY METAL DETECTION OR ARTIFACT COLLECTION TO BE CONDUCTED ON THE PROPERTY, UNLESS AUTHORIZED BY ALEXANDRIA ARCHAEOLOGY.

APPROVED
SPECIAL USE PERMIT NO. DSUP 2016-0006
DEPARTMENT OF PLANNING & ZONING

DIRECTOR DATE
DEPARTMENT OF TRANSPORTATION & ENVIRONMENTAL SERVICES
SITE PLAN No.

DIRECTOR DATE

CHAIRMAN, PLANNING COMMISSION DATE

DATE RECORDED

INSTRUMENT NO. DEED BOOK NO. PAGE NO.

Michael Baker INTERNATIONAL
3601 EISENHOWER AVENUE
SUITE 600
ALEXANDRIA, VIRGINIA 22310
TEL. 703.960.8800

Project Title
POTOMAC YARD PARK

COMMONWEALTH OF VIRGINIA
JOHN CRAIG FENNELL
Lic. No. 826
LANDSCAPE ARCHITECT

No.	Revision	Date
1.		
2.		
3.		
4.		
5.		
6.		
7.		
8.		

Drawn by: WDU Checked by: JCF
Scale: AS NOTED Date: 26 FEB 2016
Issued for
City of Alexandria Department of Project Implementation

Drawing Title
CONCEPT PLAN - SECTIONS

Drawing Number
L-301

Project Number 151053

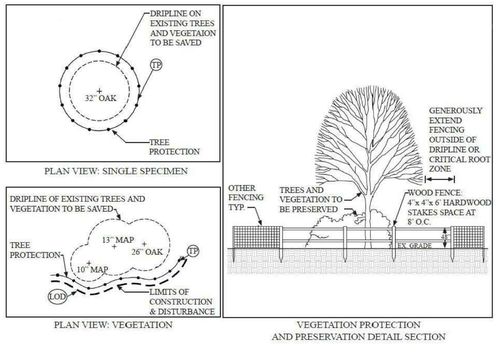

B1 TREE PROTECTION

SCALE: NO SCALE REF:

NOTE:
IF CONTAINER GROWN, SPLIT OR FRAY ROOTS EDGE OF PLANTS PRIOR TO PLANTING WITHOUT DAMAGING SOIL

STAGGER PLANTS EQUALLY TO DIMENSIONS SPECIFIED ON SCHEDULE

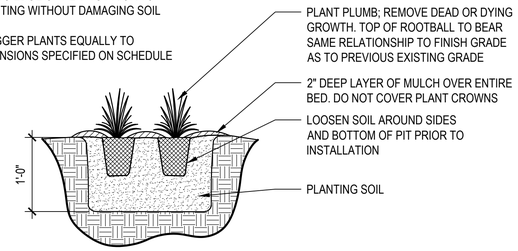

B2 GROUNDCOVER

SCALE: 1/2" = 1'-0" REF: L-501

SPACING "A"	(SEE PLANT LIST -NOTES COLUMN) ROW "B"	NUMBER OF PLANTS PER SQUARE FOOT
6" o.c.	5.20"	4.00
8" o.c.	6.93"	2.60
12" o.c.	10.40"	1.00
18" o.c.	15.60"	0.45
24" o.c.	20.80"	0.25
30" o.c.	25.40"	0.16
36" o.c.	29.70"	0.11
48" o.c.	39.60"	0.0625

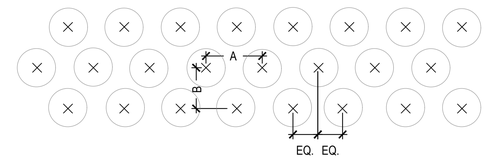

B3 PLANT SPACING CHART

SCALE: 1' = 1'-0" REF: L-501

NOTE:
IF CONTAINER GROWN, SPLIT OR FRAY ROOTS EDGE OF PLANTS PRIOR TO PLANTING WITHOUT DAMAGING SOIL

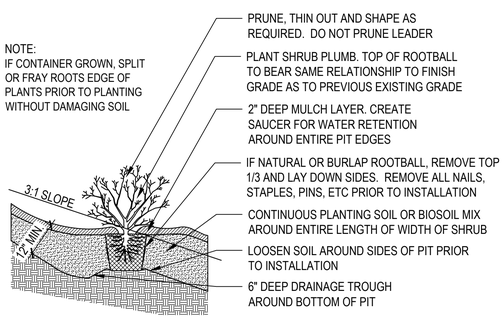

C1 SHRUB PLANTING ON SLOPE

SCALE: 1/2" = 1'-0" REF: L-501

NOTE:
IF CONTAINER GROWN, SPLIT OR FRAY ROOTS EDGE OF PLANTS PRIOR TO PLANTING WITHOUT DAMAGING SOIL

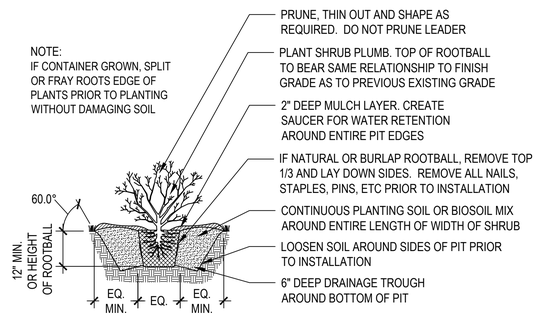

C2 SHRUB PLANTING

SCALE: 1/2" = 1'-0" REF: L-501

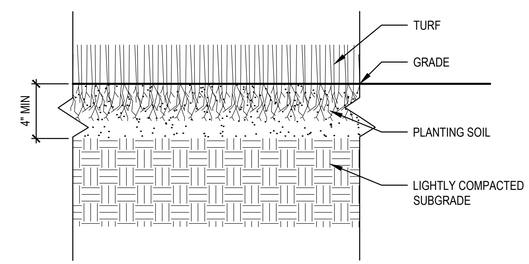

C3 TURF PLANTING

SCALE: 1' = 1'-0" REF: L-501

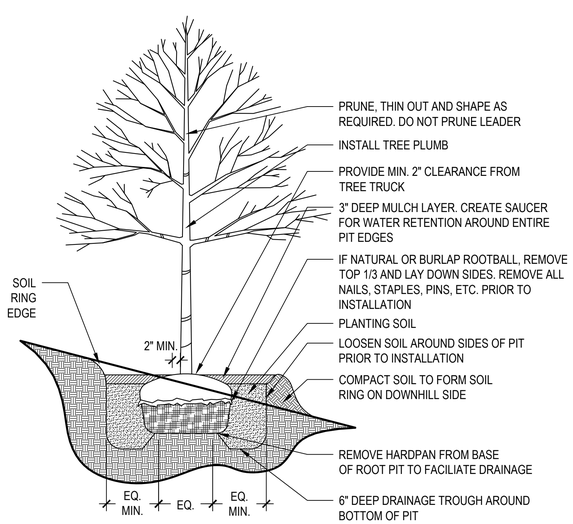

E1 TREE PLANTING ON SLOPE

SCALE: 1/2" = 1'-0" REF: L-501

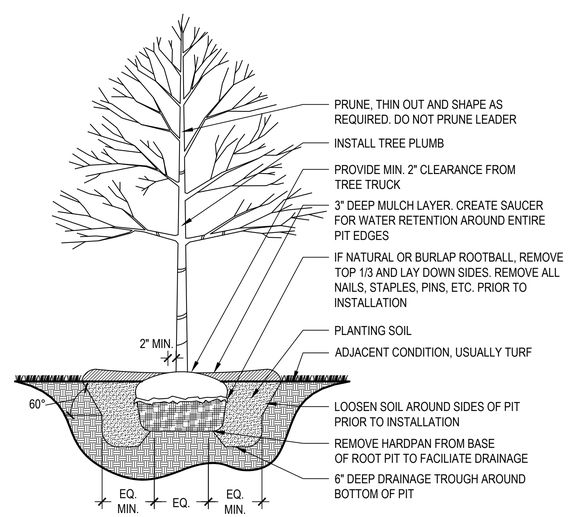

E2 TREE PLANTING

SCALE: 1/2" = 1'-0" REF: L-501

ARCHAEOLOGY NOTES:
1. THE APPLICANT/DEVELOPER SHALL CALL ALEXANDRIA ARCHAEOLOGY IMMEDIATELY (703-838-4399) IF ANY BURIED STRUCTURAL REMAINS (WALL FOUNDATIONS, WELLS, PRIVIES, CISTERNS, ETC.) OR CONCENTRATIONS OF ARTIFACTS ARE DISCOVERED DURING DEVELOPMENT. WORK MUST CEASE IN THE AREA OF THE DISCOVERY UNTIL A CITY ARCHAEOLOGIST COMES TO THE SITE AND RECORDS THE FINDS.
2. THE APPLICANT/DEVELOPER SHALL NOT ALLOW ANY METAL DETECTION OR ARTIFACT COLLECTION TO BE CONDUCTED ON THE PROPERTY, UNLESS AUTHORIZED BY ALEXANDRIA ARCHAEOLOGY.

APPROVED
SPECIAL USE PERMIT NO. DSUP 2016-0006
DEPARTMENT OF PLANNING & ZONING

DIRECTOR DATE
DEPARTMENT OF TRANSPORTATION & ENVIRONMENTAL SERVICES
SITE PLAN No.

DIRECTOR DATE

CHAIRMAN, PLANNING COMMISSION DATE

DATE RECORDED

INSTRUMENT NO. DEED BOOK NO. PAGE NO.

Michael Baker INTERNATIONAL
3601 EISENHOWER AVENUE
SUITE 600
ALEXANDRIA, VIRGINIA 22310
TEL. 703.960.8800

Project Title
POTOMAC YARD PARK

COMMONWEALTH OF VIRGINIA
JOHN CRAIG FENNELL
Lic. No. 826
LANDSCAPE ARCHITECT

No.	Revision	Date
1.		
2.		
3.		
4.		
5.		
6.		
7.		
8.		

Drawn by: WDU Checked by: JCF
Scale: AS NOTED Date: 26 FEB 2016
Issued for
City of Alexandria Department of Project Implementation

Drawing Title
PLANTING DETAILS

Drawing Number
L-501

Project Number 151053

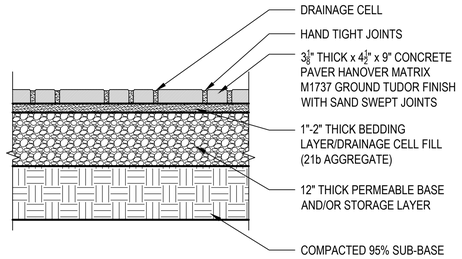

A1 CONCRETE PAVER

SCALE: 3/4" = 1'-0" REF: L-502

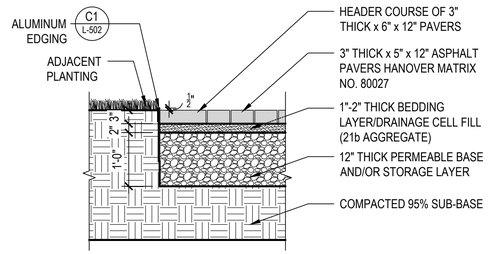

A2 ASPHALT PAVER

SCALE: 3/4" = 1'-0" REF: L-502

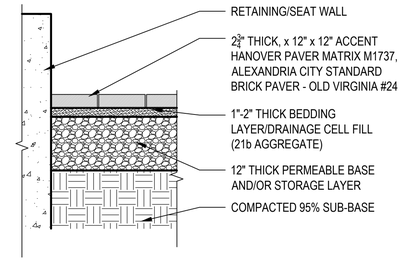

A3 ACCENT PAVER

SCALE: 3/4" = 1'-0" REF: L-502

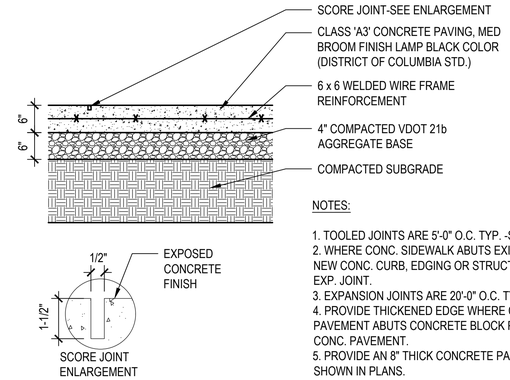

NOTES:

1. TOOLED JOINTS ARE 5'-0" O.C. TYP. -SEE PLAN.
2. WHERE CONC. SIDEWALK ABUTS EXISTING OR WHERE NEW CONC. CURB, EDGING OR STRUCTURES PROVIDE EXP. JOINT.
3. EXPANSION JOINTS ARE 20'-0" O.C. TYP. SEE PLAN.
4. PROVIDE THICKENED EDGE WHERE CONCRETE PAVEMENT ABUTS CONCRETE BLOCK PAVERS OR BIT. CONC. PAVEMENT.
5. PROVIDE AN 8" THICK CONCRETE PAVEMENT WHERE SHOWN IN PLANS.

A4 VEHICULAR CONCRETE PAVING

SCALE: 3/4" = 1'-0" REF: L-502

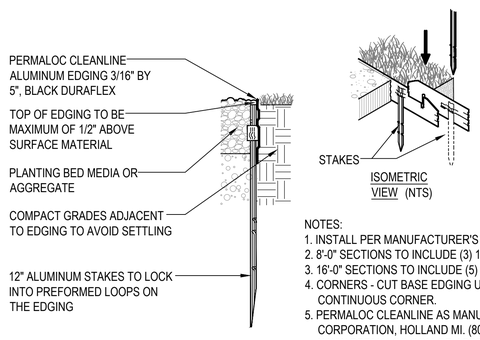

NOTES:
1. INSTALL PER MANUFACTURER'S "INSTALLATION GUIDELINES"
2. 8'-0" SECTIONS TO INCLUDE (3) 12" ALUMINUM STAKES.
3. 16'-0" SECTIONS TO INCLUDE (5) 12" ALUMINUM STAKES.
4. CORNERS - CUT BASE EDGING UP HALFWAY AND FORM A CONTINUOUS CORNER.
5. PERMALOC CLEANLINE AS MANUFACTURED BY PERMALOC CORPORATION, HOLLAND MI. (800) 356-9660, (616) 399-9600 WWW.PERMALOC.COM OR APPROVED EQUAL.

C1 ALUMINUM EDGING

SCALE: 3" = 1'-0" REF: L-502

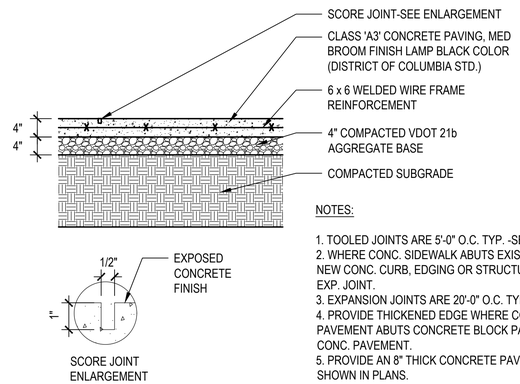

NOTES:

1. TOOLED JOINTS ARE 5'-0" O.C. TYP. -SEE PLAN.
2. WHERE CONC. SIDEWALK ABUTS EXISTING OR WHERE NEW CONC. CURB, EDGING OR STRUCTURES PROVIDE EXP. JOINT.
3. EXPANSION JOINTS ARE 20'-0" O.C. TYP. SEE PLAN.
4. PROVIDE THICKENED EDGE WHERE CONCRETE PAVEMENT ABUTS CONCRETE BLOCK PAVERS OR BIT. CONC. PAVEMENT.
5. PROVIDE AN 8" THICK CONCRETE PAVEMENT WHERE SHOWN IN PLANS.

C2 PEDESTRIAN CONCRETE PAVING

SCALE: 3/4" = 1'-0" REF: L-502

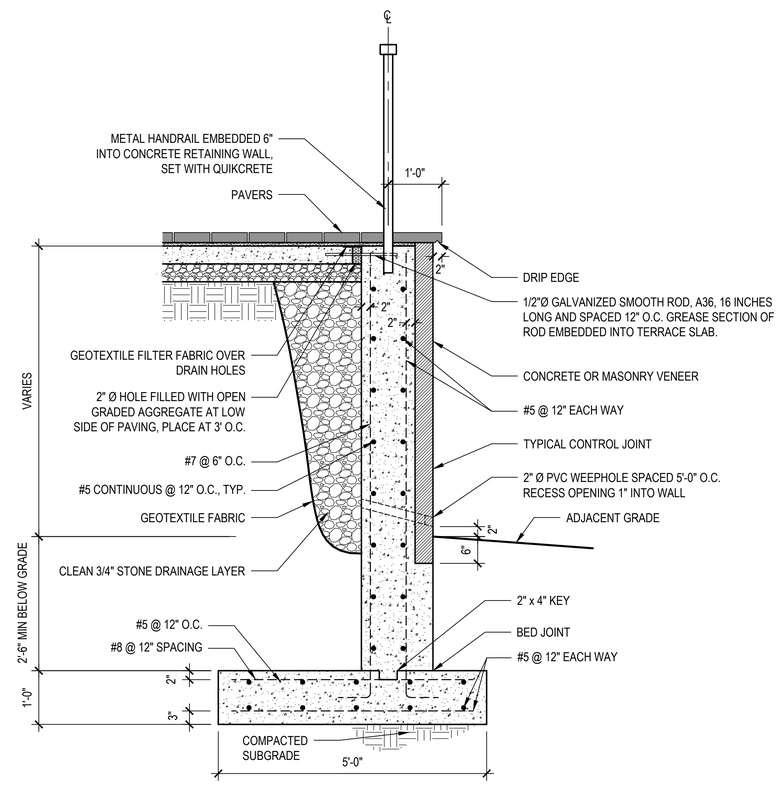

E4 RETAINING WALL WITH TERRACE

SCALE: 3/4" = 1'-0" REF: L-502

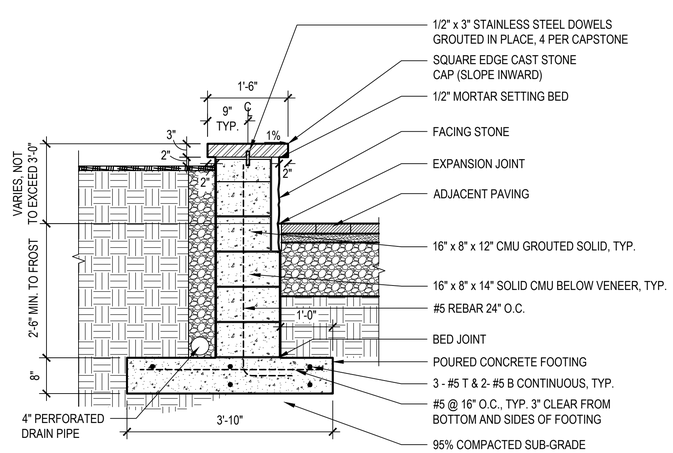

E1 RETAINING WALL (3'-0" MAX)

SCALE: 3/4" = 1'-0" REF: L-502

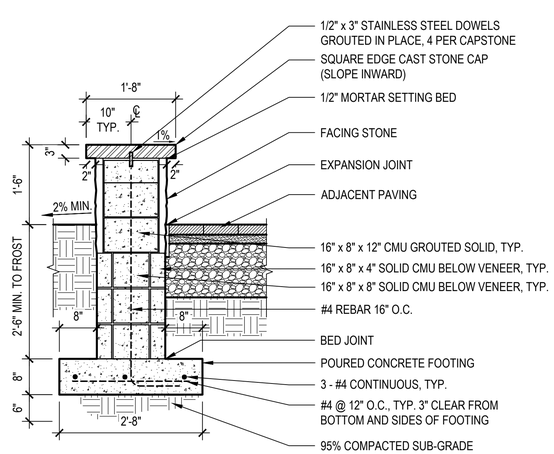

E2 SEAT WALL

SCALE: 3/4" = 1'-0" REF: L-502

ARCHAEOLOGY NOTES:
1. THE APPLICANT/DEVELOPER SHALL CALL ALEXANDRIA ARCHAEOLOGY IMMEDIATELY (703-838-4399) IF ANY BURIED STRUCTURAL REMAINS (WALL FOUNDATIONS, WELLS, PRIVIES, CISTERNS, ETC.) OR CONCENTRATIONS OF ARTIFACTS ARE DISCOVERED DURING DEVELOPMENT. WORK MUST CEASE IN THE AREA OF THE DISCOVERY UNTIL A CITY ARCHAEOLOGIST COMES TO THE SITE AND RECORDS THE FINDS.
2. THE APPLICANT/DEVELOPER SHALL NOT ALLOW ANY METAL DETECTION OR ARTIFACT COLLECTION TO BE CONDUCTED ON THE PROPERTY, UNLESS AUTHORIZED BY ALEXANDRIA ARCHAEOLOGY.

APPROVED
SPECIAL USE PERMIT NO. DSUP 2016-0006
DEPARTMENT OF PLANNING & ZONING

DIRECTOR DATE
DEPARTMENT OF TRANSPORTATION & ENVIRONMENTAL SERVICES
SITE PLAN No.

DIRECTOR DATE

CHAIRMAN, PLANNING COMMISSION DATE

DATE RECORDED

INSTRUMENT NO. DEED BOOK NO. PAGE NO.

Michael Baker INTERNATIONAL
3601 EISENHOWER AVENUE
SUITE 600
ALEXANDRIA, VIRGINIA 22310
TEL. 703.960.8800

Project Title

POTOMAC YARD PARK

COMMONWEALTH OF VIRGINIA
JOHN CRAIG FENNELL
Lic. No. 826
LANDSCAPE ARCHITECT

No.	Revision	Date
1.		
2.		
3.		
4.		
5.		
6.		
7.		
8.		

Drawn by: WDU Checked by: JCF
Scale: AS NOTED Date: 26 FEB 2016
Issued for

City of Alexandria Department of Project Implementation

Drawing Title

HARDSCAPE DETAILS

Drawing Number

L-502

Project Number 151053

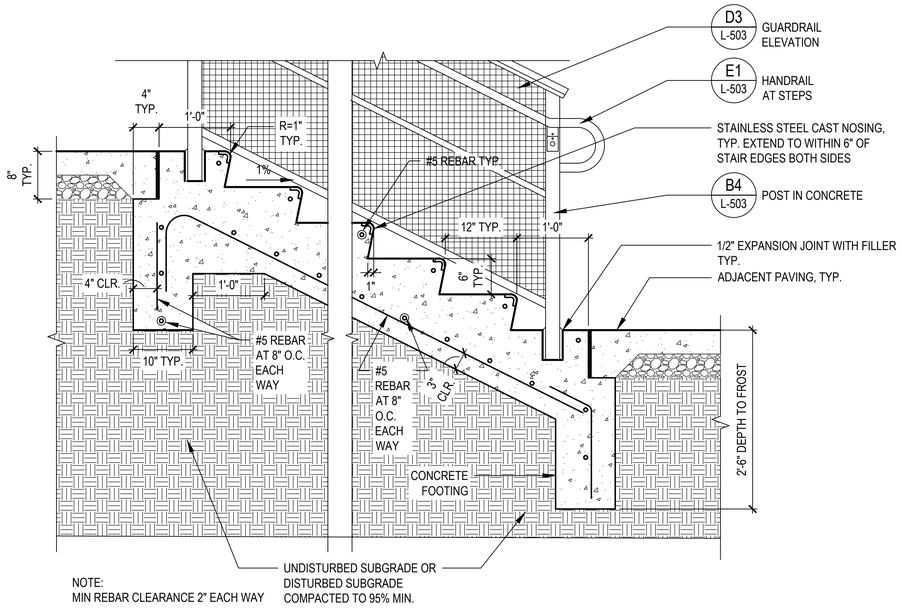

NOTE:
MIN REBAR CLEARANCE 2" EACH WAY

B1 STAIR SECTION

SCALE: 1" = 1'-0" REF: L-503

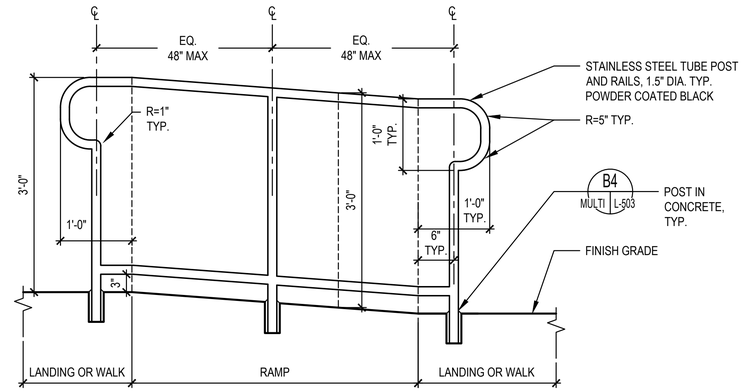

NOTES:

1. ALL SITE ELEMENTS TO MATCH EXISTING PARK SITE FURNISHINGS UNLESS OTHERWISE NOTED.

2. WHEN HANDRAIL WOULD PROJECT OUT INTO SPACE AND CAUSE AN OBSTRUCTION TO PEOPLE TRAVELING PERPENDICULAR TO RAMP, PULL OUTER EDGE OF HANDRAIL BACK INTO RAMP BY 1'-0" TO ELIMINATE OBSTRUCTION.

B3 HANDRAIL AT RAMPS

SCALE: 1" = 1'-0" REF: L-503

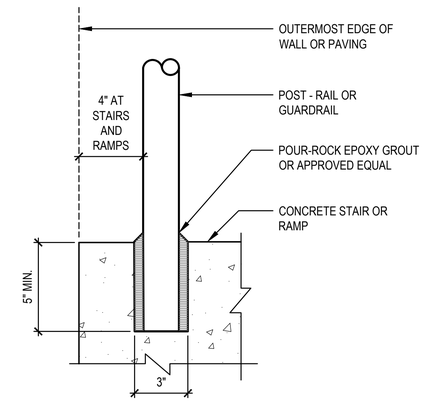

B4 POST IN CONCRETE

SCALE: 3" = 1'-0" REF: L-503

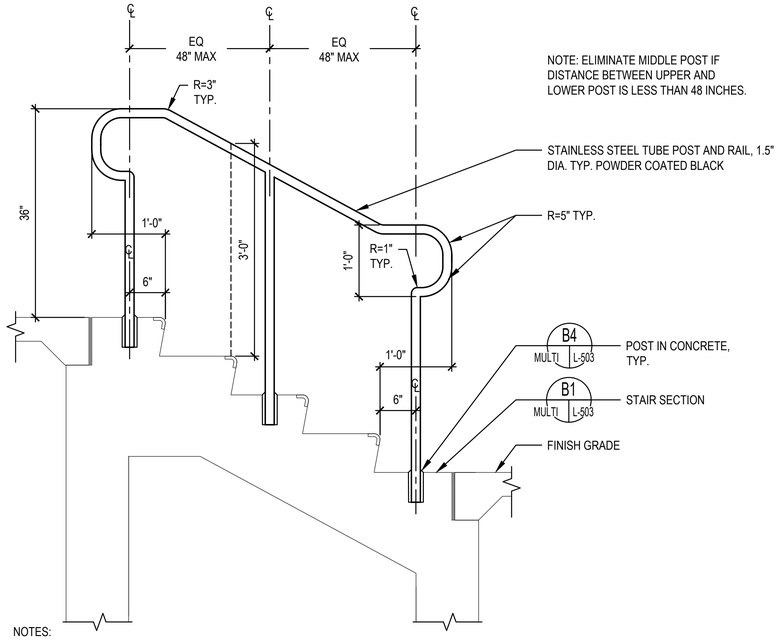

NOTE: ELIMINATE MIDDLE POST IF DISTANCE BETWEEN UPPER AND LOWER POST IS LESS THAN 48 INCHES.

NOTES:

1. ALL SITE ELEMENTS TO MATCH EXISTING PARK SITE FURNISHINGS UNLESS OTHERWISE NOTED.

2. WHEN HANDRAIL WOULD PROJECT OUT INTO SPACE AND CAUSE AN OBSTRUCTION TO PEOPLE TRAVELING PERPENDICULAR TO RAMP, PULL OUTER EDGE OF HANDRAIL BACK INTO RAMP BY 1'-0" TO ELIMINATE OBSTRUCTION.

E1 HANDRAIL AT STEPS

SCALE: 1" = 1'-0" REF: L-503

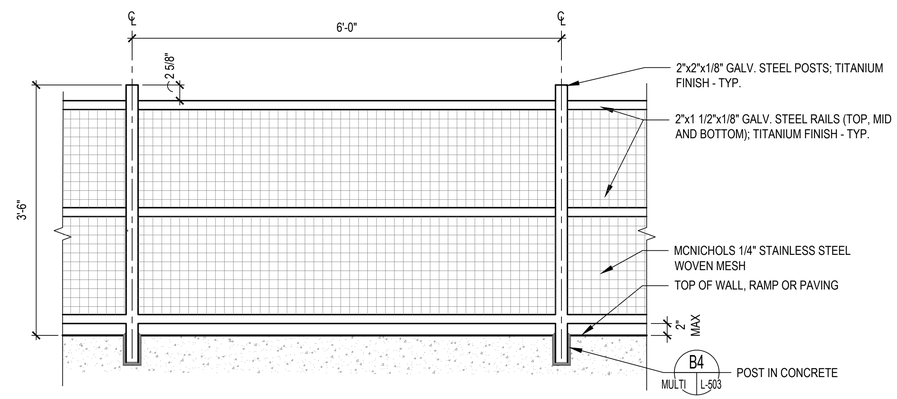

NOTE: ALL SITE ELEMENTS TO MATCH EXISTING PARK SITE FURNISHINGS UNLESS OTHERWISE NOTED.

D3 GUARDRAIL ELEVATION

SCALE: 1" = 1'-0" REF: L-503

ARCHAEOLOGY NOTES:
1. THE APPLICANT/DEVELOPER SHALL CALL ALEXANDRIA ARCHAEOLOGY IMMEDIATELY (703-838-4399) IF ANY BURIED STRUCTURAL REMAINS (WALL FOUNDATIONS, WELLS, PRIVIES, CISTERNS, ETC.) OR CONCENTRATIONS OF ARTIFACTS ARE DISCOVERED DURING DEVELOPMENT. WORK MUST CEASE IN THE AREA OF THE DISCOVERY UNTIL A CITY ARCHAEOLOGIST COMES TO THE SITE AND RECORDS THE FINDS.
2. THE APPLICANT/DEVELOPER SHALL NOT ALLOW ANY METAL DETECTION OR ARTIFACT COLLECTION TO BE CONDUCTED ON THE PROPERTY, UNLESS AUTHORIZED BY ALEXANDRIA ARCHAEOLOGY.

APPROVED
SPECIAL USE PERMIT NO. DSUP 2016-0006
DEPARTMENT OF PLANNING & ZONING

DIRECTOR DATE
DEPARTMENT OF TRANSPORTATION & ENVIRONMENTAL SERVICES
SITE PLAN No.

DIRECTOR DATE

CHAIRMAN, PLANNING COMMISSION DATE

DATE RECORDED

INSTRUMENT NO. DEED BOOK NO. PAGE NO.

Michael Baker
INTERNATIONAL
3601 EISENHOWER AVENUE
SUITE 600
ALEXANDRIA, VIRGINIA 22310
TEL. 703.960.8800

Project Title

POTOMAC YARD PARK

COMMONWEALTH OF VIRGINIA
JOHN CRAIG FENNELL
Lic. No. 826
LANDSCAPE ARCHITECT

No.	Revision	Date
1.		
2.		
3.		
4.		
5.		
6.		
7.		
8.		

Drawn by: WDU Checked by: JCF
Scale: AS NOTED Date: 26 FEB 2016
Issued for

City of Alexandria Department of Project Implementation

Drawing Title

STAIR AND HANDRAIL DETAILS

Drawing Number

L-503

Project Number 151053

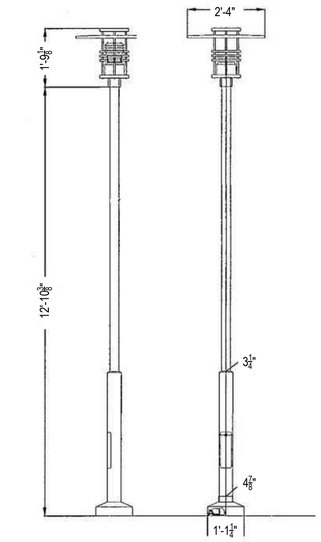

B1 POLE LIGHT
SCALE: NO SCALE REF: L-504

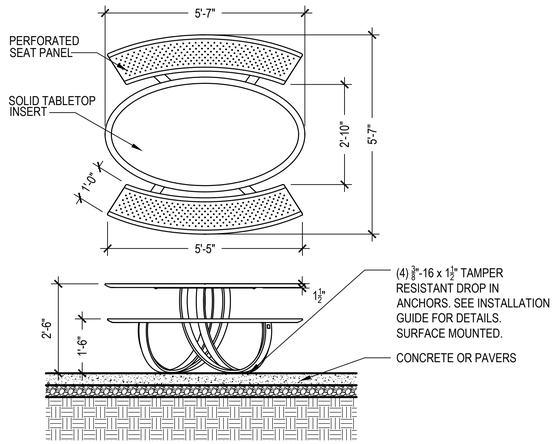

B2 TABLE
SCALE: 1/2" = 1'-0" REF: L-504

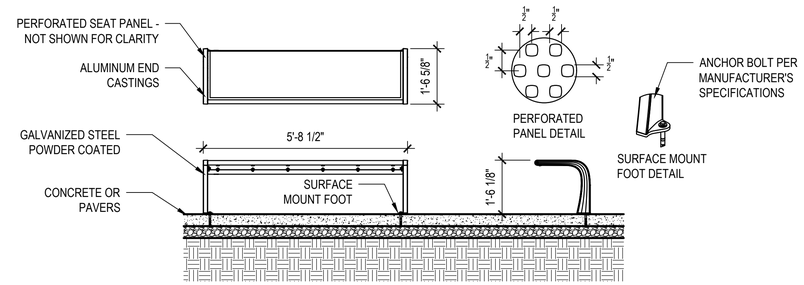

B3 BACKLESS BENCH
SCALE: 1/2" = 1'-0" REF: L-504

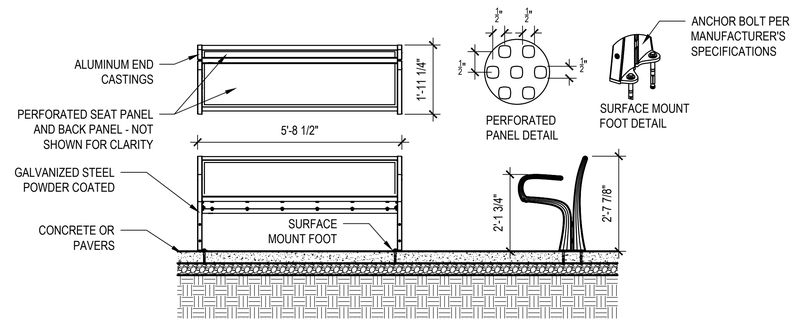

C3 BENCH WITH BACK
SCALE: 1/2" = 1'-0" REF: L-504

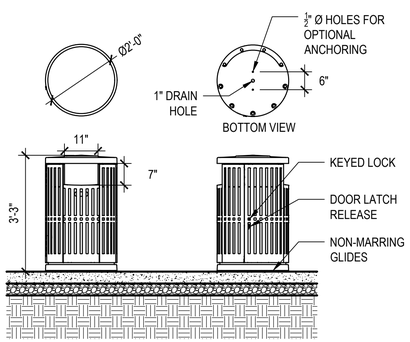

D1 TRASH CAN
SCALE: 1/2" = 1'-0" REF: L-504

ARCHAEOLOGY NOTES:
1. THE APPLICANT/DEVELOPER SHALL CALL ALEXANDRIA ARCHAEOLOGY IMMEDIATELY (703-838-4399) IF ANY BURIED STRUCTURAL REMAINS (WALL FOUNDATIONS, WELLS, PRIVIES, CISTERNS, ETC.) OR CONCENTRATIONS OF ARTIFACTS ARE DISCOVERED DURING DEVELOPMENT. WORK MUST CEASE IN THE AREA OF THE DISCOVERY UNTIL A CITY ARCHAEOLOGIST COMES TO THE SITE AND RECORDS THE FINDS.
2. THE APPLICANT/DEVELOPER SHALL NOT ALLOW ANY METAL DETECTION OR ARTIFACT COLLECTION TO BE CONDUCTED ON THE PROPERTY, UNLESS AUTHORIZED BY ALEXANDRIA ARCHAEOLOGY.

APPROVED
SPECIAL USE PERMIT NO. DSUP 2016-0006
DEPARTMENT OF PLANNING & ZONING
DIRECTOR DATE
DEPARTMENT OF TRANSPORTATION & ENVIRONMENTAL SERVICES
SITE PLAN No.
DIRECTOR DATE
CHAIRMAN, PLANNING COMMISSION DATE
DATE RECORDED
INSTRUMENT NO. DEED BOOK NO. PAGE NO.

Michael Baker
INTERNATIONAL
3601 EISENHOWER AVENUE
SUITE 600
ALEXANDRIA, VIRGINIA 22310
TEL. 703.960.8800

Project Title
POTOMAC YARD PARK

COMMONWEALTH OF VIRGINIA
JOHN CRAIG FENNELL
Lic. No. 826
LANDSCAPE ARCHITECT

No.	Revision	Date
1.		
2.		
3.		
4.		
5.		
6.		
7.		
8.		

Drawn by: WDU Checked by: JCF
Scale: AS NOTED Date: 26 FEB 2016
Issued for
City of Alexandria Department of Project Implementation

Drawing Title
SITE FURNISHINGS

Drawing Number
L-504

Project Number 151053

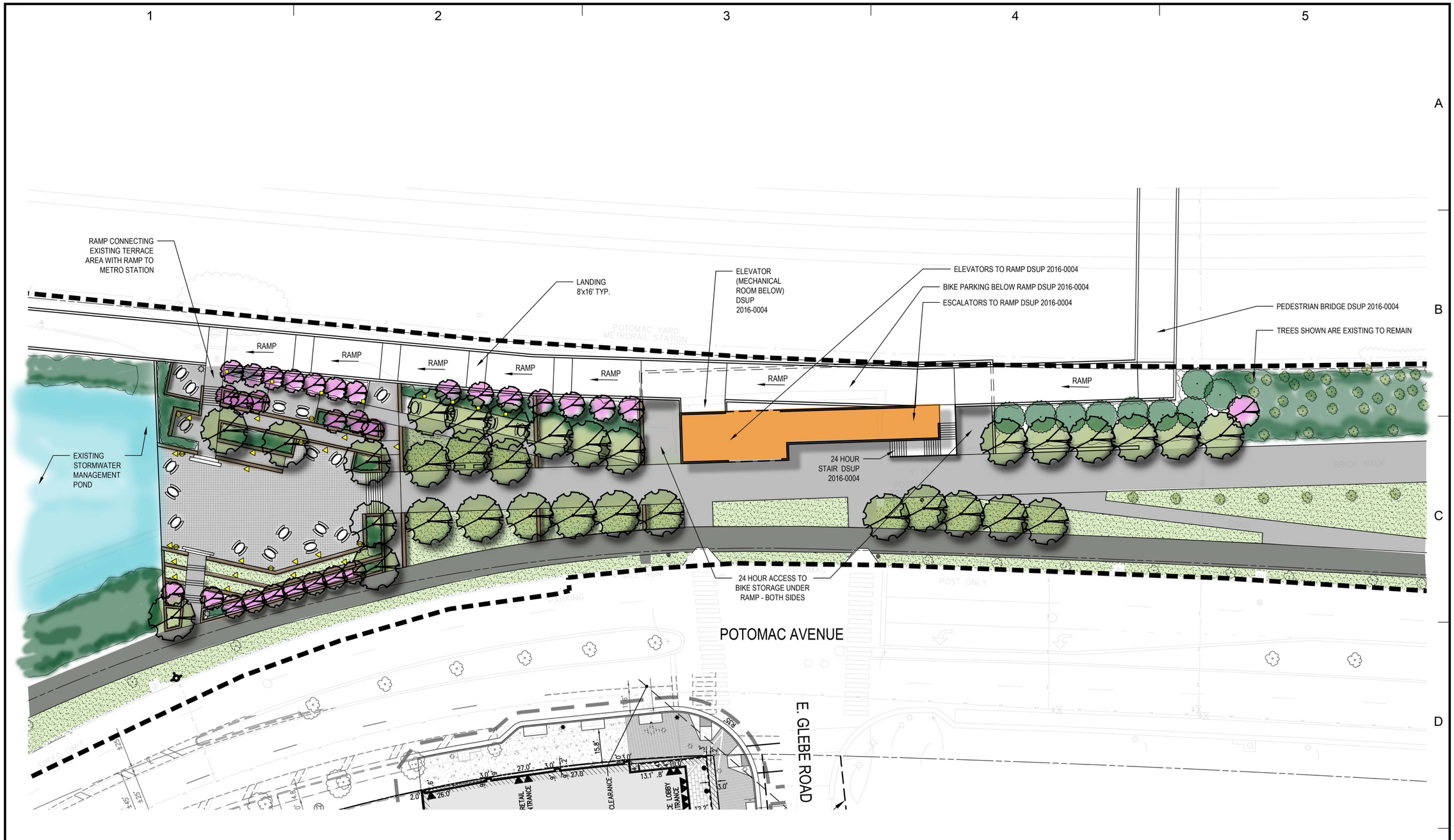

20 10 0 20

SCALE: 1"=20'-0"
AT 24"x36"

N

WMATA LDP
COORDINATE SYSTEM

ARCHAEOLOGY NOTES:
1. THE APPLICANT/DEVELOPER SHALL CALL ALEXANDRIA ARCHAEOLOGY IMMEDIATELY (703-838-4399) IF ANY BURIED STRUCTURAL REMAINS (WALL FOUNDATIONS, WELLS, PRIVIES, CISTERNS, ETC.) OR CONCENTRATIONS OF ARTIFACTS ARE DISCOVERED DURING DEVELOPMENT. WORK MUST CEASE IN THE AREA OF THE DISCOVERY UNTIL A CITY ARCHAEOLOGIST COMES TO THE SITE AND RECORDS THE FINDS.
2. THE APPLICANT/DEVELOPER SHALL NOT ALLOW ANY METAL DETECTION OR ARTIFACT COLLECTION TO BE CONDUCTED ON THE PROPERTY, UNLESS AUTHORIZED BY ALEXANDRIA ARCHAEOLOGY.

APPROVED
SPECIAL USE PERMIT NO. DSUP 2016-0006
DEPARTMENT OF PLANNING & ZONING

DIRECTOR DATE
DEPARTMENT OF TRANSPORTATION & ENVIRONMENTAL SERVICES
SITE PLAN No.

DIRECTOR DATE

CHAIRMAN, PLANNING COMMISSION DATE

DATE RECORDED

INSTRUMENT NO. DEED BOOK NO. PAGE NO.

Michael Baker
INTERNATIONAL
3601 EISENHOWER AVENUE
SUITE 600
ALEXANDRIA, VIRGINIA 22310
TEL. 703.960.8800

Project Title
POTOMAC YARD PARK

COMMONWEALTH OF VIRGINIA
JOHN CRAIG FENNELL
Lic. No. 826
LANDSCAPE ARCHITECT

No.	Revision	Date
1.		
2.		
3.		
4.		
5.		
6.		
7.		
8.		

Drawn by: BDC Checked by: JCF
Scale: AS NOTED Date: 26 FEB 2016
Issued for
City of Alexandria Department of Project Implementation

Drawing Title
CONCEPT PLAN

Drawing Number
LP-01

Project Number 151053

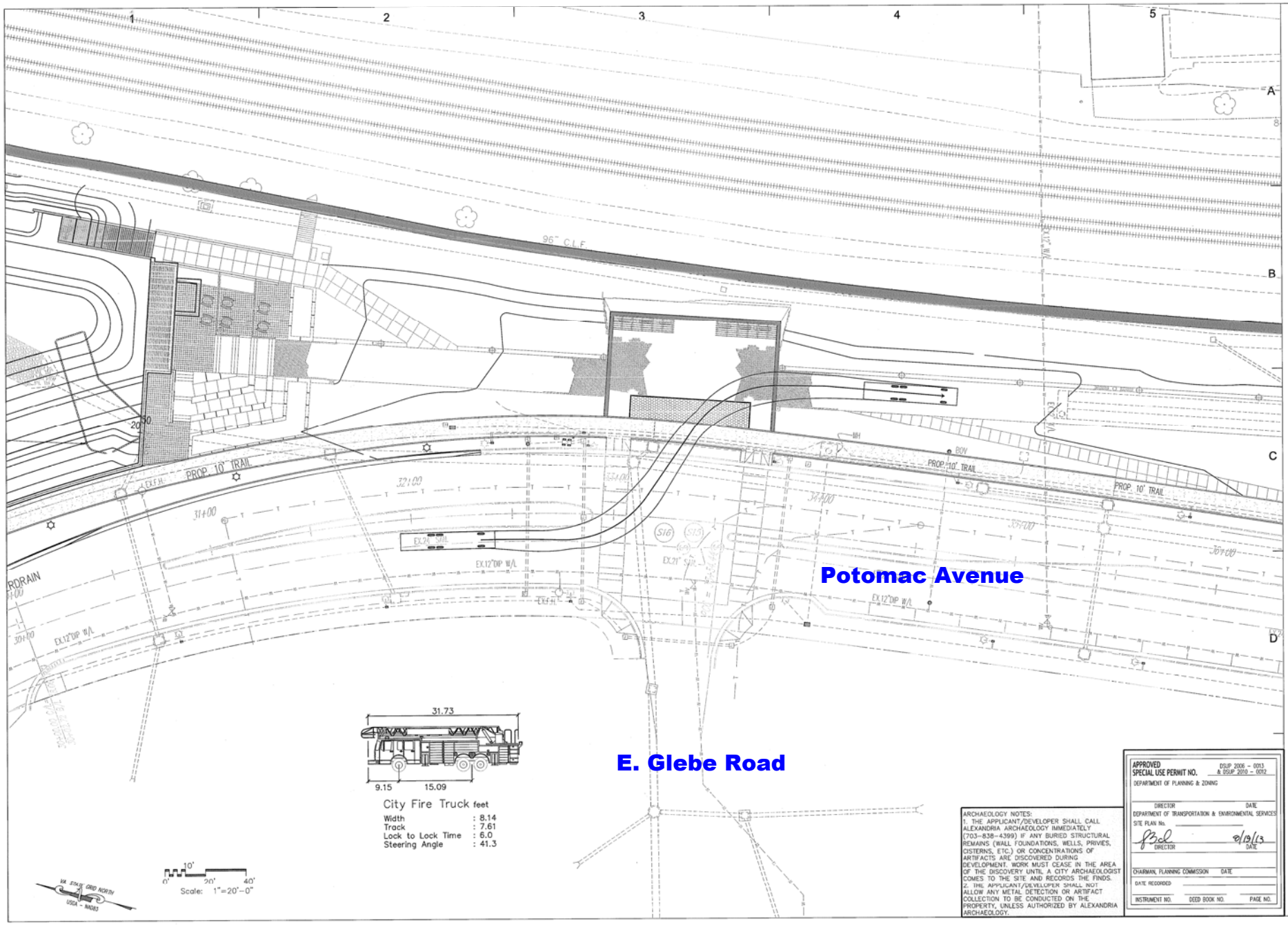

ARCHAEOLOGY NOTES:
1. THE APPLICANT/DEVELOPER SHALL CALL ALEXANDRIA ARCHAEOLOGY IMMEDIATELY (703-838-4399) IF ANY BURIED STRUCTURAL REMAINS (WALL FOUNDATIONS, WELLS, PRIVIES, CISTERNS, ETC.) OR CONCENTRATIONS OF ARTIFACTS ARE DISCOVERED DURING DEVELOPMENT. WORK MUST CEASE IN THE AREA OF THE DISCOVERY UNTIL A CITY ARCHAEOLOGIST COMES TO THE SITE AND RECORDS THE FINDS.
2. THE APPLICANT/DEVELOPER SHALL NOT ALLOW ANY METAL DETECTION OR ARTIFACT COLLECTION TO BE CONDUCTED ON THE PROPERTY, UNLESS AUTHORIZED BY ALEXANDRIA ARCHAEOLOGY.

APPROVED
SPECIAL USE PERMIT NO. DSUP 2006 - 0013 & DSUP 2010 - 0012
DEPARTMENT OF PLANNING & ZONING
DIRECTOR DATE
DEPARTMENT OF TRANSPORTATION & ENVIRONMENTAL SERVICES
SITE PLAN No.
DIRECTOR 8/19/13 DATE
CHAIRMAN, PLANNING COMMISSION DATE
DATE RECORDED
INSTRUMENT NO. DEED BOOK NO. PAGE NO.

LPDA
LPDA, Inc.
46169 Westlake Drive, Suite 340
Sterling, Virginia 20165
P: 703-437-7907 F: 434-296-2109
www.lpda.net

Project Title
POTOMAC YARD PARK

COMMONWEALTH OF VIRGINIA
JAMES C. BISHOFF
Lic. No. 031721
02-21-13
PROFESSIONAL ENGINEER

No.	Revision	Date
1.	60% Set Revision	7/20/10
2.	Interim 100% Set Revision	10/28/10
3.	100% Set Revision	12/16/10
4.	Minor Amendment	04/21/11
5.	Minor Amendment	03/22/12
6.	Minor Amendment	02/21/13

Drawn by: Checked by:
Scale: 1"=20' Date: February 21, 2013
Issued for
POTOMAC YARD DEVELOPMENT, LLC.

Drawing Title
EMERGENCY ACCESS TURNING MOVEMENTS EAST GLEBE ROAD

Drawing Number
C-41

Project Number
1004-01

R5

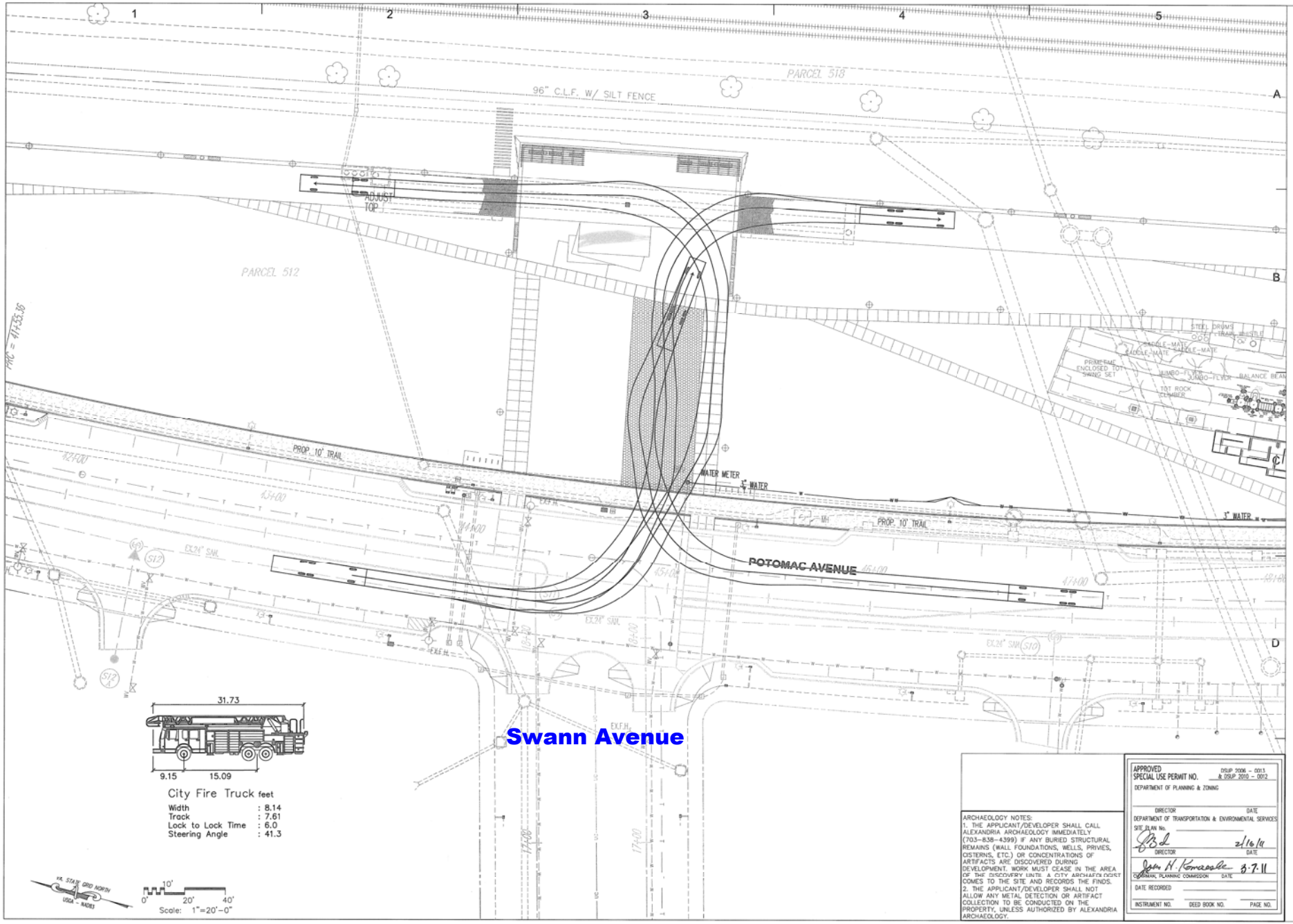

ARCHAEOLOGY NOTES:
1. THE APPLICANT/DEVELOPER SHALL CALL ALEXANDRIA ARCHAEOLOGY IMMEDIATELY (703-838-4399) IF ANY BURIED STRUCTURAL REMAINS (WALL FOUNDATIONS, WELLS, PRIVIES, CISTERNS, ETC.) OR CONCENTRATIONS OF ARTIFACTS ARE DISCOVERED DURING DEVELOPMENT. WORK MUST CEASE IN THE AREA OF THE DISCOVERY UNTIL A CITY ARCHAEOLOGIST COMES TO THE SITE AND RECORDS THE FINDS.
2. THE APPLICANT/DEVELOPER SHALL NOT ALLOW ANY METAL DETECTION OR ARTIFACT COLLECTION TO BE CONDUCTED ON THE PROPERTY, UNLESS AUTHORIZED BY ALEXANDRIA ARCHAEOLOGY.

APPROVED
SPECIAL USE PERMIT NO. DSUP 2006 - 0013 & DSUP 2010 - 0012
DEPARTMENT OF PLANNING & ZONING
DIRECTOR DATE
DEPARTMENT OF TRANSPORTATION & ENVIRONMENTAL SERVICES
SITE PLAN No.
DIRECTOR DATE 2/16/11
CHAIRMAN, PLANNING COMMISSION DATE 3-7-11
DATE RECORDED
INSTRUMENT NO. DEED BOOK NO. PAGE NO.

LPDA
LPDA, Inc.
46169 Westlake Drive, Suite 340
Sterling, Virginia 20165
P: 703-437-7907 F: 434-296-2109
www.lpda.net
CIVIL ENGINEER

J2 Engineers, Inc.
7030 Industry Ridge Road, Manassas, VA 20109
703.361.1550 (office) 703.361.1586 (fax)
www.j2engineers.com

Project Title
POTOMAC YARD PARK

COMMONWEALTH OF VIRGINIA
JAMES C. BISHOFF
Lic. No. 036721
CR-26-11
PROFESSIONAL ENGINEER

No.	Revision	Date
1.	60% Set Revision	7/20/10
2.	Interim 100% Set Revision	10/28/10
3.	100% Set Revision	12/16/10

Drawn by JDW Checked by JCB
Scale 1"=20' Date: January 26, 2011
Issued for
POTOMAC YARD DEVELOPMENT, LLC.

Drawing Title
EMERGENCY ACCESS TURNING MOVEMENTS SWANN AVENUE

Drawing Number
C-42

Project Number
1004-01