CSS Long Term Control Plan Update

LTCPU REPORT

City of Alexandria, VA
Department of Transportation and Environmental Services

FINAL for Virginia Department of Environmental Quality
December 2016

GREELEY AND HANSEN

Table of Contents

Abbreviations AB-1

Executive Summary ES-1

ES.1 Background ES-1
ES.1.1 Hunting Creek Bacterial Total Maximum Daily Load (TMDL) ES-2
ES.1.2 Purpose of the Long Term Control Plan Update (LTCPU) ES-2
ES.2 Basis of Planning ES-3
ES.3 CSO Technologies Screening ES-3
ES.4 Evaluation of Preliminary Alternatives ES-3
ES.5 Recommended Plan ES-4
ES.5.1 Store and Treat – Primary Strategy ES-4
ES.5.2 Complementary Strategies ES-5
ES.6 CSO-001 Strategy ES-6
ES.7 Budget and Funding ES-7
ES.8 Implementation ES-7

Section 1 Introduction 1-1

1.1 Background 1-1
1.2 City's Sewer System 1-1
1.3 City's Approved LTCP (1999) 1-4
1.4 Hunting Creek Total Maximum Daily Load (TMDL) 1-4
1.5 Purpose of the Long Term Control Plan Update (LTCPU) 1-6

Section 2 Public Participation 2-1

2.1.1 Local Outreach 2-2
2.1.2 Public Meetings 2-2
2.1.3 City Council 2-2
2.1.4 Technical Review Panel 2-2
2.1.5 CSS Stakeholder Group 2-3
2.1.6 AlexEngage 2-3

Section 3 Basis of Planning 3-1

3.1 Regulatory Approaches 3-1

Table of Contents

3.1.1 USEPA Presumption Approach 3-1
3.1.2 USEPA Demonstration Approach 3-1
3.1.3 Hunting Creek TMDL Wasteload Allocations 3-2
3.1.4 Public Input 3-2
3.2 CSS Sewershed Changes 3-2
3.3 Flow Projections 3-3
3.4 Typical Year Selection 3-3
3.5 Hydrologic and Hydraulic Modeling 3-4

Section 4 Preliminary Alternatives 4-1
4.1 CSO Technologies Screening 4-1
4.2 Preliminary Alternatives 4-1
4.2.1 Disinfection 4-1
4.2.2 Green Infrastructure 4-2
4.2.3 Sewer Separation 4-3
4.2.4 Storage Tanks 4-3
4.2.5 Storage Tunnels 4-4
4.2.6 Combinations of Technologies 4-4

Section 5 Evaluation of Alternatives 5-1
5.1 Evaluation Criteria 5-1
5.2 Shortlist of Alternatives Selection 5-2

Section 6 Evaluation and Selection of Proposed Infrastructure 6-1
6.1 Alignments and Site Evaluation 6-1
6.1.1 CSO-003/004 Tunnel Alignments 6-1
6.1.1.1 CSO-003/004 Tunnel Alignment 1 6-2
6.1.1.2 CSO-003/004 Tunnel Alignment 2 6-2
6.1.1.3 CSO-003/004 Tunnel Alignment 3 6-2
6.1.2 Upstream Dropshaft Location 6-3
6.1.3 CSO-002 Tunnel Alignments 6-4
6.1.4 CSO-002 Storage Tanks 6-6
6.1.4.1 CSO-002 Tank Alternative 1 6-6
6.1.4.2 CSO-002 Tank Alternative 2 6-6

Table of Contents

6.1.4.3 CSO-002 Tank Alternative 3 6-7
6.1.4.4 CSO-002 Tank Alternative 4 6-7
6.1.5 CSO-002 Tunnels vs Storage Tanks....6-7
6.1.6 Recommendation 6-8
6.2 Infrastructure Sizing Analysis 6-8
6.2.1 Overflow Evaluation 6-9
6.2.2 Water Quality Evaluation....6-9
6.2.3 Recommendation 6-10

Section 7 Recommended Plan 7-1
7.1 Store and Treat 7-1
7.1.1 CSO-003/004 Storage Tunnel....7-1
7.1.2 CSO-002 Storage Tank....7-3
7.2 Green Infrastructure 7-4
7.2.1 Green Infrastructure Strategy....7-4
7.3 Targeted Sewer Separation 7-5
7.4 Other Strategies 7-5
7.4.1 Real Time Control 7-5
7.5 CSO-001 Strategy....7-6

Section 8 Operational Plan 8-1
8.1 CSO-002 Storage Tank CSO 003/004 Storage Tunnel Facilities....8-1
8.1.1 Diversion Structures....8-1
8.1.2 Shafts 8-2
8.1.3 Storage Tunnel....8-2
8.1.4 Hydraulic Grade Line (HGL) Control Structure....8-3
8.1.5 Wet Weather Pump Station....8-3
8.1.6 New CSO-004 Outfall Structure 8-4
8.1.7 Existing CSO-003 Outfall Structure....8-4
8.2 CSO-002 Storage Facilities....8-4
8.2.1 Storage Tank....8-4

Section 9 Program Implementation Plan.... 9-1
9.1 Recommended Facilities....9-1

Table of Contents

9.2 Program Implementation Schedule 9-2
9.2.1 Program Assumptions 9-2
9.2.2 Program Elements 9-2
9.2.2.1 Planning 9-2
9.2.2.2 VDEQ Review and Approval 9-3
9.2.2.3 Design and Bid Phase 9-3
9.2.2.4 Construction 9-3
9.2.2.5 Post Construction Monitoring 9-3
9.2.2.6 Permitting 9-3
9.2.2.7 Easements and Land Acquisition 9-5
9.2.2.8 Public Outreach 9-6
9.2.3 Implementation Schedule 9-6
9.3 Program Costs and Spending Projections 9-8
9.4 Program Funding Strategy 9-8

Section 10 Post Construction Monitoring Plan 10-1

10.1 Post Construction Monitoring 10-1
10.2 Flow Monitoring Plan 10-1

List of Tables

Table ES-1 Preliminary Capital Costs (2015 Dollars) ES-7
Table 1-1 Wasteload Allocation for COA Combined Sewer System 1-6
Table 3-1 Total Average Daily Flow Projections 3-3
Table 3-2 Criteria Weightings 3-4
Table 5-1 CSO Control Strategy Ranking 5-2
Table 5-2 Recommended Shortlist of Primary CSO Control Strategies 5-3
Table 6-1 CSO-003/004 Alignments Weighted Ratings 6-2
Table 6-2 CSO-002 Alignments Weighted Ratings 6-5
Table 6-3 CSO-002 Storage Tanks Weighted Rating 6-7
Table 6-4 CSO-003/004 Tunnel Diameter Summary 6-9
Table 6-5 CSO-002 Tank Volume Summary 6-9
Table 9-1 LTCPU Preliminary Permit Register 9-4
Table 9-2 LTCPU Potential Easements and Land Acquisition Needs 9-5
Table 9-3 Preliminary Capital Costs (2015 Dollars) 9-8

Table of Contents

List of Figures

Figure ES-1 CSS Overview....ES-2
Figure ES-2 LTCPU Framework....ES-4
Figure ES-3 CSO-003/004 Proposed Storage Tunnel Alignment....ES-5
Figure ES-4 CSO-002 Potential Storage Tank Locations....ES-6
Figure ES-5 LTCPU Implementation Schedule....ES-8
Figure 1-1 Separate Sewer Systems.... 1-1
Figure 1-2 Combined Sewer Systems.... 1-1
Figure 1-3 Sewer System Overview.... 1-2
Figure 1-4 CSS Overview.... 1-3
Figure 1-5 Relevant Local Watersheds.... 1-5
Figure 1-6 Required Reductions.... 1-5
Figure 4-1 Evapotranspiration.... 4-2
Figure 5-1 Evaluation Criteria Weightings.... 5-1
Figure 6-1 CSO-003/004 Tunnel Alignments.... 6-1
Figure 6-2 Potential Upstream Dropshaft Locations.... 6-3
Figure 6-3 CSO-002 Connected Tunnel Alignments.... 6-4
Figure 6-4 CSO-002 Separate Tunnel Alignments.... 6-5
Figure 6-5 CSO-002 Storage Tank Sites.... 6-6
Figure 7-1 LTCPU Framework.... 7-1
Figure 7-2 CSO-003/004 Proposed Storage Tunnel Alignment.... 7-3
Figure 7-3 CSO-002 Proposed Storage Tank Locations.... 7-4
Figure 9-1 Implementation Schedule.... 9-7

List of Appendices

Appendix A: List of Meetings
Appendix B: CSO-003/004 Storage Tunnel Conceptual Plans
Appendix C: CSO-002 Storage Tank Conceptual Plans

Table of Contents

List of References

The Long Term Control Plan Update (LTCPU) was developed as a series of technical memoranda and submitted to the Virginia Department of Environmental Quality (VDEQ) for their review and comment between August 2013 and June 2016. Although these documents served as the basis for the final LTCPU, specific aspects of the final LTCPU Report have changed since the original technical memoranda were written. As such, these reference documents should be used to gain a deeper understanding of the methodologies used in developing the final LTCPU Report. It should be noted that reference documents 2, 3, 4, 6, 7, 8, and 10 were reviewed and approved by VDEQ in a letter to the City dated April 1, 2015.

1. LTCPU Work Plan
2. Regulatory Requirements
3. Public Participation Plan
4. Combined Sewer System Characterization
5. Combined Sewer System Sewershed Changes
6. Flow Projections
7. Typical Year Selection
8. Hydrologic and Hydraulic Modeling
9. Basis for Cost Opinions
10. CSO Control Technology Screening
11. Alternatives Evaluation: Disinfection
12. Alternatives Evaluation: Green Infrastructure
13. Alternatives Evaluation: Sewer Separation
14. Alternatives Evaluation: Storage Tanks
15. Alternatives Evaluation: Tunnels
16. Evaluation Criteria
17. Alternatives Evaluation: Ranking and Recommendation
18. Water Quality Modeling Assessment
19. CSO-001 Strategies
20. Alignments and Site Evaluation
21. Infrastructure Sizing Analysis
22. Green Infrastructure Strategy

Abbreviations

$M	Dollars in Millions
AACE	Association of Advancement of Cost Engineering
AADF	Annual Average Daily Flow
AC	Acres
ADF	Average Daily Flow
AlexRenew	Alexandria Renew Enterprises
ARP	Area Reduction Plan
ASA	Alexandria Sanitation Authority
BMP	Best Management Practices
BOD	Biochemical Oxygen Demand
CCI	Construction Costs Indices
CI	Commonwealth Interceptor
CIP	Capital Improvement Plan
City	City of Alexandria, VA
COA	City of Alexandria
CSO	Combined Sewer Overflow
CSO-001	Pendleton Street Outfall
CSO-002	Royal Street Outfall
CSO-003	Duke Street Outfall
CSO-004	Hooffs Run Outfall
CSS	Combined Sewer System
Ct	Contact Time
CWA	Clean Water Act
DEC	Department of Environmental Conservation
DEM	Dynamic Estuary Model
DEP	Department of Environmental Protection
DEQ	Department of Environmental Quality
DO	Dissolved Oxygen
DOJ	Department of Justice
DOS	Disk Operating System
DVP	Dominion Virginia Power
DWSD	Detroit Water and Sewage Department
E & S	Erosion and Sediment
EAP	Environmental Act Plan
ELCIRC	Euler-Lagrangian Circulation
ENR	Engineering News-Record
EOS	Edge of Stream
EPA	Environmental Protection Agency
EPBM	Earth Pressure Balance Machine
EPC	Environmental Policy Commission
FCWA	Federal Clean Water Act
ft	Feet
gal	Gallon
GARP	Greened Acre Retrofit Program
DC	District of Colombia

GI ..... Green Infrastructure
GIS ..... Geographic Information System
GPD ..... gallon per day
GRD ..... Grease Removal Devices
HDD ..... Horizontal Directional Drilling
HGL ..... Hydraulic Grade Line
HOV ..... High Occupancy Vehicle
hr ..... Hour
HRJC ..... Hoofs Run Junction Chamber
HSPF ..... Hydrologic Simulation Program FORTRAN
HY ..... Hybrid
I/I ..... Inflow and Infiltration
ICRBP ..... Interstate Commission on the Potomac River Basin
IDDE ..... Illicit Discharge Detection and Elimination
in ..... Inch
ITT ..... Institute of transportation Engineers
kWH ..... Kilowatt Hours
lbs ..... Pounds
LEED ..... Leadership in Energy and Environmental Design
LF ..... Linear Foot
LID ..... Low Impact Development
LTCP ..... Long Term Control Plan
LTCPU ..... Long Term Control Plan Update
M ..... Millions
MG ..... Million Gallons
mg/L ..... Milligram/liter
MGD ..... Million Gallons per Day
min ..... Minute
mL ..... Milliliters
MS4 ..... Municipal Separate Storm Sewer System
MTBM ..... Micro Tunnel Boring Machine
MWCOG ..... Metropolitan Washington Council of Governments
N ..... Nitrogen
P ..... Phosphorous
TSS ..... Total Suspended Solids
$NaHSO_3$ ..... Sodium Bisulfite
NaOCl ..... Sodium Hydrochlorite
NGVD ..... National Geodetic Vertical Datum
NMC ..... Nine Minimum Control
NMF ..... Nutrient Management Facility
NOAA ..... National Oceanic and Atmospheric Administration
NPDES ..... National Pollution Discharge Elimination System
NPS ..... National Park Services
NPW ..... Net Present Worth
NRCS ..... Nutrient Resources Conservation Service
NWS ..... National Weather Service
O&M ..... Operating and Maintenance

PAA ..... Peracetic Acid
PER ..... Preliminary Engineering Report
POTW ..... Publicly Owned Treatment Works
PPP ..... Public Participation Plan
PPT ..... Pre-cast Post Tension Tanks
PYTS ..... Potomac Yard Trunk Sewer
ROW ..... Right-of-Way
RPA ..... Resource Protection Area
RTC ..... Real Time Control
SANDAG ..... San Diego Association of Governments
SF ..... Square Foot
SOM ..... Sewer Overflow Model
SP ..... Separation
Sq ft ..... Square Feet
SSO ..... Sanitary Sewer Overflow
ST ..... Storage
SWMIP ..... Stormwater Management Incentives Program
SWMM ..... Storm Water Management Model
T&ES ..... Department of Transportation and Environmental Services
TAZ ..... Traffic Analysis Zone
TBM ..... Tunnel Boring Machine
TMDL ..... Total Maximum Daily Load
TR ..... Treatment
TRC ..... Total Residual Chlorine
TSS ..... Total Suspended Solids
TU ..... Tunnels
UAA ..... Use Attainability Analysis
URL ..... Uniform Resource Locator
USDOE ..... United States Department of Energy
USEPA ..... United States Environmental Protection Agency
UV ..... Ultraviolet
VA ..... Virginia
VDEQ ..... Virginia Department of Environmental Quality
VDH ..... Virginia Department of Health
VDOT ..... Virginia Department of Transportation
VIMS ..... Virginia Institute of Marine Science
VPDES ..... Virginia Pollutant Discharge Elimination System
VMRC ..... Virginia Marine Resources Commission
WIP ..... Watershed Implementation Plan
WLA ..... Waste Load Allocation
WMATA ..... Washington Metropolitan Transit Authority
WPCP ..... Water Pollution Control Plant
WQS ..... Water Quality Standards
WRRF ..... Water Resources Recovery Facility
WWPS ..... Wet Weather Pump Station
WWTP ..... Wastewater Treatment Plant
XPSWMM ..... XP Solutions Storm Water Management Model

Executive Summary

ES.1 Background

There are two types of sewer systems in the City of Alexandria – a combined sewer system and a separate sewer system. In a combined sewer systems (CSS), there is only one pipe to convey both sewage and stormwater to a wastewater treatment plant. Many older cities in the United States are served by combined sewers, including the City of Alexandria. During wet weather events, the sewage collection system and/or wastewater treatment plant may be unable to handle the combined flows. During these conditions, Alexandria's combined sewers discharge excess flows into the waterways through one of its four permitted combined sewer outfalls. This is known as a combined sewer overflow (CSO).

The City's sewer system covers approximate 15.4 square miles, of which less than 6% (540 acres) is served by the CSS as shown in Figure ES-1. During wet weather, flows in the CSS discharge to the surrounding waterbodies through four outfalls that serve three subareas within the CSS (CSO-003 and CSO-004 serve the same subarea). The City operates its CSS under a permit issued by Virginia Department of Environmental Quality (VDEQ) and has had an approved Long Term Control Plan for the CSS since 1999.

Figure ES-1
CSS Overview

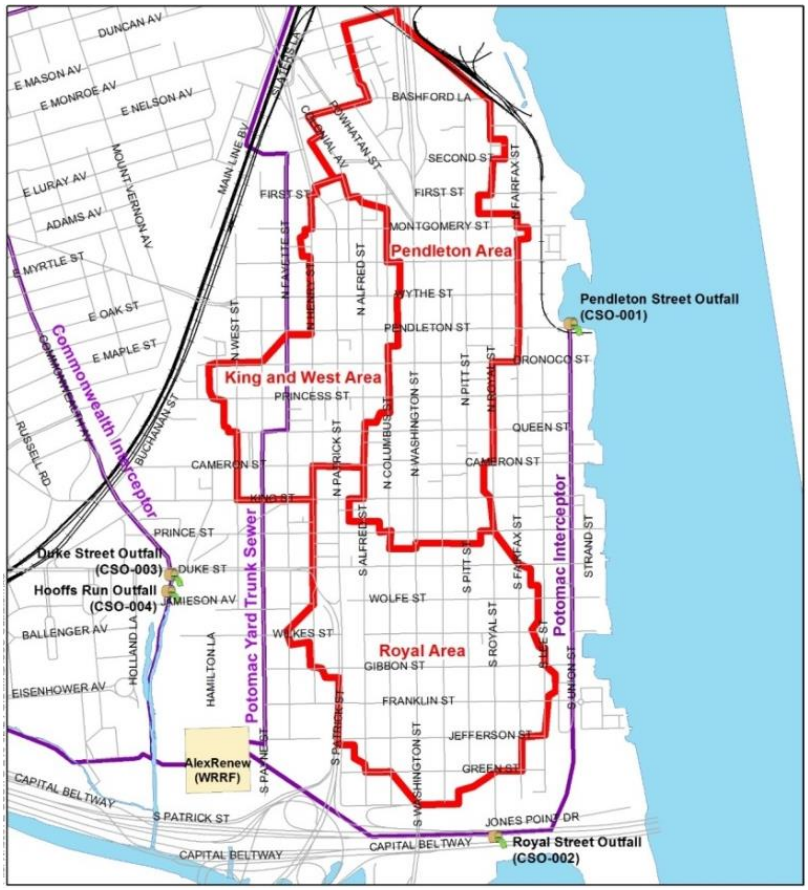

ES.1.1 Hunting Creek Bacterial Total Maximum Daily Load (TMDL)

On November 2, 2010, VDEQ issued Bacteria TMDLs for the Hunting Creek, Cameron Run, and Holmes Run Watersheds. The TMDL assigns bacteria loads to all the sources contributing to Hunting Creek, these bacteria loads are known as Waste Load Allocations (WLA). The WLAs in the TMDL require higher reductions in bacteria from the City's combined sewer overflows than called for in the previously approved LTCP. In addition, the TMDL requires very high bacteria reductions from other sources, including stormwater, septic, and wildlife to meet water quality standards. The Hunting Creek TMDL only applies to three of the City's four CSO outfalls (CSO-002, CSO-003, and CSO-004.) It should be noted that CSO-001 is not included in the Hunting Creek TMDL because it discharges to Oronoco Bay, which is not part of the Hunting Creek watershed.

ES.1.2 Purpose of the Long Term Control Plan Update (LTCPU)

In August 2013 the City received a new CSS permit issued by VDEQ. One of the conditions of this permit required the City to update its existing 1999 Long Term Control Plan by August 23, 2016 in order to meet the new Hunting Creek TMDL bacteria reductions. Although the VDEQ permit does not require

addressing CSO-001 in this LTCPU, the City is also including a phased approach in the LTCPU to further reduce overflows at CSO-001 through targeted sewer separation and green infrastructure.

ES.2 Basis of Planning

The EPA CSO Control Policy lays out a framework for developing the LTCPU. The EPA CSO Control Policy in addition to providing a technical approach also calls for public involvement and outreach. The City conducted extensive public outreach including the creation of a community stakeholder group. Concerns of the stakeholder group were incorporated and helped form the final LTCPU plan.

One approach for CSO planning under the EPA CSO Control Policy is the *Presumption Approach*. This approach states that if the number of CSO events can be limited to 4 – 6 overflows per year during a typical year, it can be presumed to provide an adequate level of control to meet the water quality-based requirements of the CWA, provided the permitting authority determines that such presumption is reasonable. The proposed LTCPU meet or exceed this level of control. As suggested under the EPA CSO Control Policy, the City used a typical rainfall year to evaluate the alternatives and select a proposed approach for the LTCPU. To determine the typical assessment year, a 40-year time period from 1974 through 2013 was selected and analyzed. Based on this analysis, the year 1984 was ranked first and selected as the typical year for the LTCPU and best represents the long-term average rainfall conditions. The year 1984 rainfall was determined to be more appropriate for the LTCPU than the Hunting Creek TMDL years (2004-2005) because the TMDL years contain extreme wet weather events, including an event with a return frequency equal to or greater than a 60-year storm event. Extreme wet weather events are not typically used for the planning and designing of CSO controls, as it would increase the project complexity and costs dramatically, while providing little to no additional environmental benefit (see the *Infrastructure Sizing Analysis Technical Memorandum* dated June 2016*)*. More detailed information about the evaluation of the typical year can be found in the *Typical Year Selection Technical Memorandum* dated September 2014.

ES.3 CSO Technologies Screening

A wide range of technologies were screened to identify suitable CSO control technologies for further evaluation. Based upon the screening of technologies, the following technologies were identified as primary technologies for detailed consideration as part of the alternatives evaluation:

- Disinfection
- Green Infrastructure(GI)
- Sewer Separation
- Storage Tanks
- Storage Tunnels
- Combinations of the above technologies

ES.4 Evaluation of Preliminary Alternatives

Evaluation criteria were developed and used to rate each of the CSO control alternatives during the alternatives analysis portion of the LTCPU. The evaluation criteria were developed and tailored to meet the requirements of the Hunting Creek TMDL while providing a solution unique to the needs of the City of Alexandria. Based on the weighted ratings of each of the alternatives, a combination of storage tanks and storage tunnels was selected for further evaluation. The three primary strategies considered further were: 1) a storage tunnel for CSO-003/004 and a separate storage tunnel for CSO-002; 2) a storage tunnel for CSO-003/004 and a storage tank for CSO-002; and 3) one continuous tunnel connecting CSO-

002/003/004. These three options were further evaluated, which resulted the selection of a storage tunnel for CSO-003/004 and a storage tank for CSO-002 as the primary strategy in the LTCPU.

ES.5 Recommended Plan

The overall LTCPU framework can be thought of as a pyramid as shown in Figure ES-2. The base of the LTCPU is the store and treat strategy that will reduce the bacteria loading and number of CSO events from approximately 50-70 per year down to 4 or fewer overflows during the typical year for CSOs-002, 003 and 004. In addition to the store and treat infrastructure, green infrastructure (GI), targeted sewer separation, and other potential opportunities will be implemented as complementary strategies that will help to reduce the volume of overflows and bacteria entering Hunting Creek even further over time. The store and treat strategy, including a storage tunnel for CSOs-003 and 004 and storage tank for CSO-002, will be implemented no later than 2035. Following the implementation of this plan, the City's Combined Sewer System will be in compliance with the Hunting Creek TMDL.

Figure ES-2
LTCPU Framework

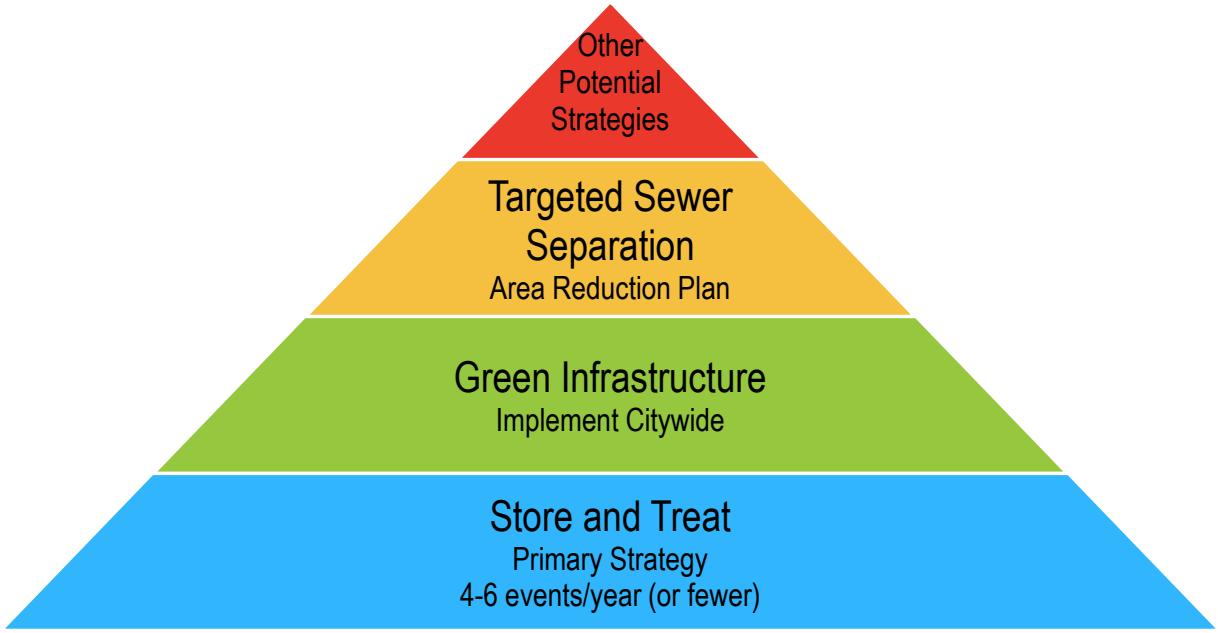

ES.5.1 Store and Treat – Primary Strategy

A 10-foot diameter (1.6 million gallon) tunnel is planned to address CSO-003/004 (Figure ES-3) and a 3.0 million gallon storage tank is planned to address CSO-002 (Figure ES-4, which shows potential locations, one to be selected). The size of the proposed infrastructure is 50-60% greater than required to meet the level of control specified in the EPA's *Presumption Approach*. Additionally, this larger infrastructure sizing was supported by the community stakeholder group. Based on the needs of the City and synergy with other sewer projects in the City, the CSO-003/004 tunnel is planned to be constructed

first and the CSO-002 storage tank is planned be constructed following completion and a performance evaluation of the CSO-003/004 tunnel.

ES.5.2 Complementary Strategies

While GI cannot meet the goals of the Hunting Creek TMDL on its own, it can be used to reduce the stormwater entering the combined sewer system and provide other ancillary benefits for the community. GI is incorporated in the LTCPU as a complementary strategy that will be implemented citywide.

Targeted sewer separation is also incorporated as a complementary strategy. Targeted sewer separation can be used as to further reduce these overflows over time. The City currently has a program for separating combined sewers, whenever practicable, as a condition of redevelopment and will continue to implement this moving forward. This is known as the Area Reduction Plan (ARP). In addition, the City will leverage Small Area Plans (SAPs), including the ongoing Old Town North SAP, that will evaluate sewer separation on a system-wide basis in order to facilitate separation projects as redevelopment occurs over a period of time.

Figure ES-3
CSO-003/004 Proposed Storage Tunnel Alignment

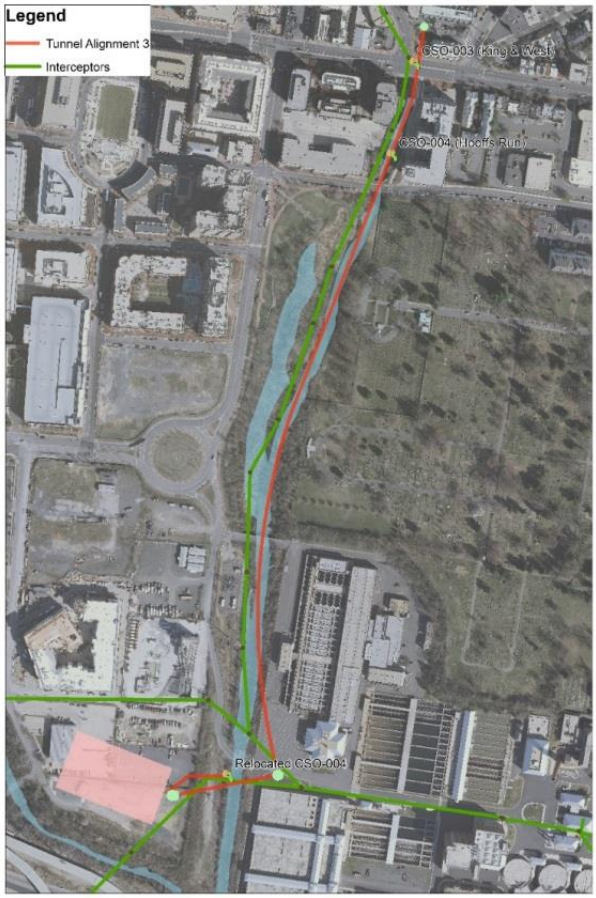

Figure ES-4
CSO-002 Potential Storage Tank Locations

ES.6 CSO-001 Strategy

CSO-001 is not addressed under the Hunting Creek TMDL. Moreover, there is no regulatory requirement to further reduce overflows at CSO-001 (Pendleton). However, the City of Alexandria as part of its Eco-City goals, has decided to incorporate additional controls for CSO-001 in the LTCPU using the approach as follows:

- CSO-001 Phase I – Continue sewer separation and implement green infrastructure in the Pendleton sewershed to reduce overflows at CSO-001 over time. Additionally, the City will conduct a feasibility study of additional controls for CSO-001 during the 2018-2023 permit cycle. The feasibility study will take into account existing infrastructure and utilities, permitting issues and environmental issues in order to determine which locations would be most suitable to construct future combined sewer infrastructure.
- CSO-001 Phase II – Beginning in 2026, assess the level of control following substantial completion of the CSO project for CSO-003 and CSO-004, performance of CSO-001 Phase I, and future regulatory requirements. This assessment will include engineering analyses that will recommend future infrastructure (potentially a store and treat strategy) to address remaining

overflows at this outfall. Also, planning level costs, rate impacts and timeline option(s) for implementation will be provided.

ES.7 Budget and Funding

A summary of the planning level capital costs for the LTCPU is included in Table ES-1. All costs presented are in 2015 dollars. The LTCPU projects will be funded through the issuance of bonds which are paid back through the sanitary sewer rates.

Table ES-1
Preliminary Capital Costs (2015 Dollars)

	Capital Costs ($)	Capital Costs +50% ($)
CSO-003/004 Storage Tunnel and Facilities	$79,800,000	$119,700,000
CSO-002 Storage Tank and Facilities	$35,410,000	$53,115,000
Green Infrastructure	$5,000,000	$7,500,000
Targeted Sewer Separation	$5,000,000	$7,500,000
Total Costs	**$125,210,000**	**$187,815,000**

ES.8 Implementation

The LTCPU recommends that the proposed infrastructure projects be constructed in phases. A program implementation schedule for the recommended projects included in the LTCPU is provided in Figure ES-5.

Figure ES-5
LTCPU Implementation Schedule

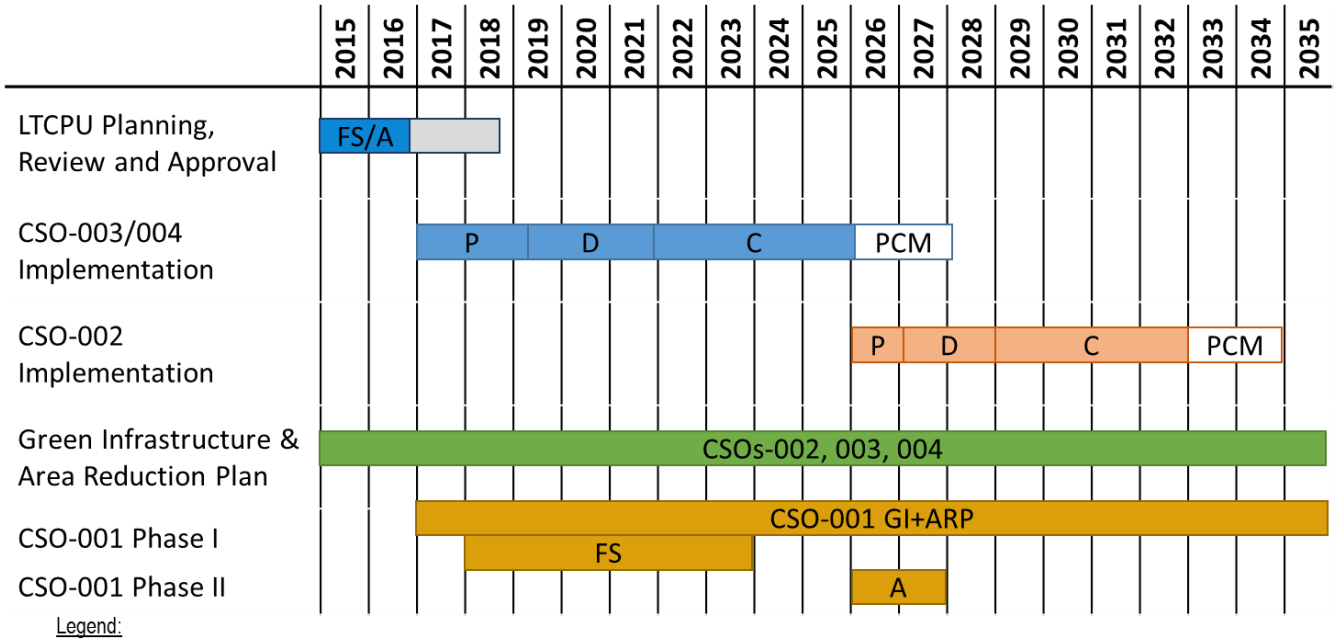

Legend:
A: Assessment & Planning; ARP: Separation; C: Construction; D: Design; FS: Feasibility (Alternatives) Studies
GI: Green Infrastructure; P: Planning; PCM: Post Construction Monitoring

Section 1 Introduction

1.1 Background

There are two types of sewer systems in the City of Alexandria – a combined sewer system and a separate sewer system. Separate sewer systems consist of two sets of pipes. One pipe conveys stormwater runoff from storm drains to local waterways. The other pipe conveys sanitary sewage to a local wastewater treatment plant as shown in Figure 1-1.

Figure 1-1
Separate Sewer Systems

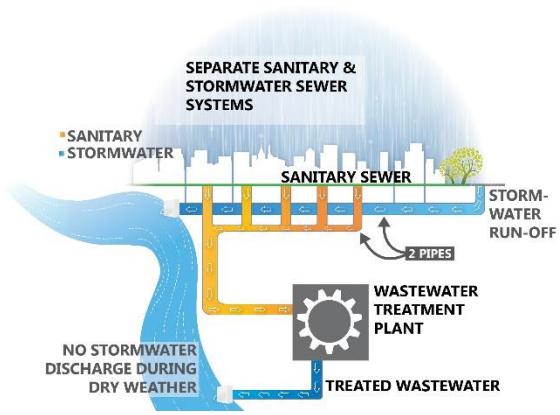

Figure 1-2
Combined Sewer Systems

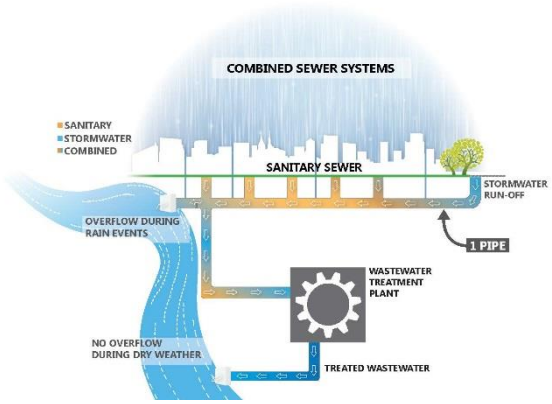

Combined sewer systems (CSS) have only one pipe which conveys both sewage and stormwater to a wastewater treatment plant as shown in Figure 1-2. Many older cities in the United States are served by combined sewers. The CSS is designed to maximize the flows to the Alexandria Renew Enterprises (AlexRenew) Water Resources Recovery Facility (WRRF) as much as possible, however during some wet weather events, the sewage collection system and/or wastewater treatment plant may be unable to handle the combined flows. During these conditions, Alexandria's combined sewers discharge excess flows into the waterways through one of its four combined sewer outfalls.

1.2 City's Sewer System

An overview of the City of Alexandria's sewer system is shown in Figure 1-3. The City's sewer system covers approximate 15.4 square miles and consists of both a separate sewer system and a 540-acre combined sewer system (CSS). During wet weather, flows in the CSS discharge to the surrounding waterbodies through four permitted outfalls that serve three subareas within the CSS (Outfall 003 and Outfall 004 serve the same subarea). Figure 1-4 shows the CSS areas and outfall in more detail.

- Pendleton Street CSO (CSO-001);
- Royal Street CSO (CSO-002);
- Duke Street CSO (CSO-003); and
- Hooffs Run CSO (CSO-004).

In 1990, the City applied for a combined sewer system discharge permit and in 1995 the VDEQ issued the City its first permit (VPDES Permit No. VA0087068). Prior to the end of the first 5-year permit term, the City reapplied for a new permit that was then issued in 2001. The City was issued a new permit in 2007 and received its current 5-year permit on August 23, 2013.

Figure 1-3
Sewer System Overview

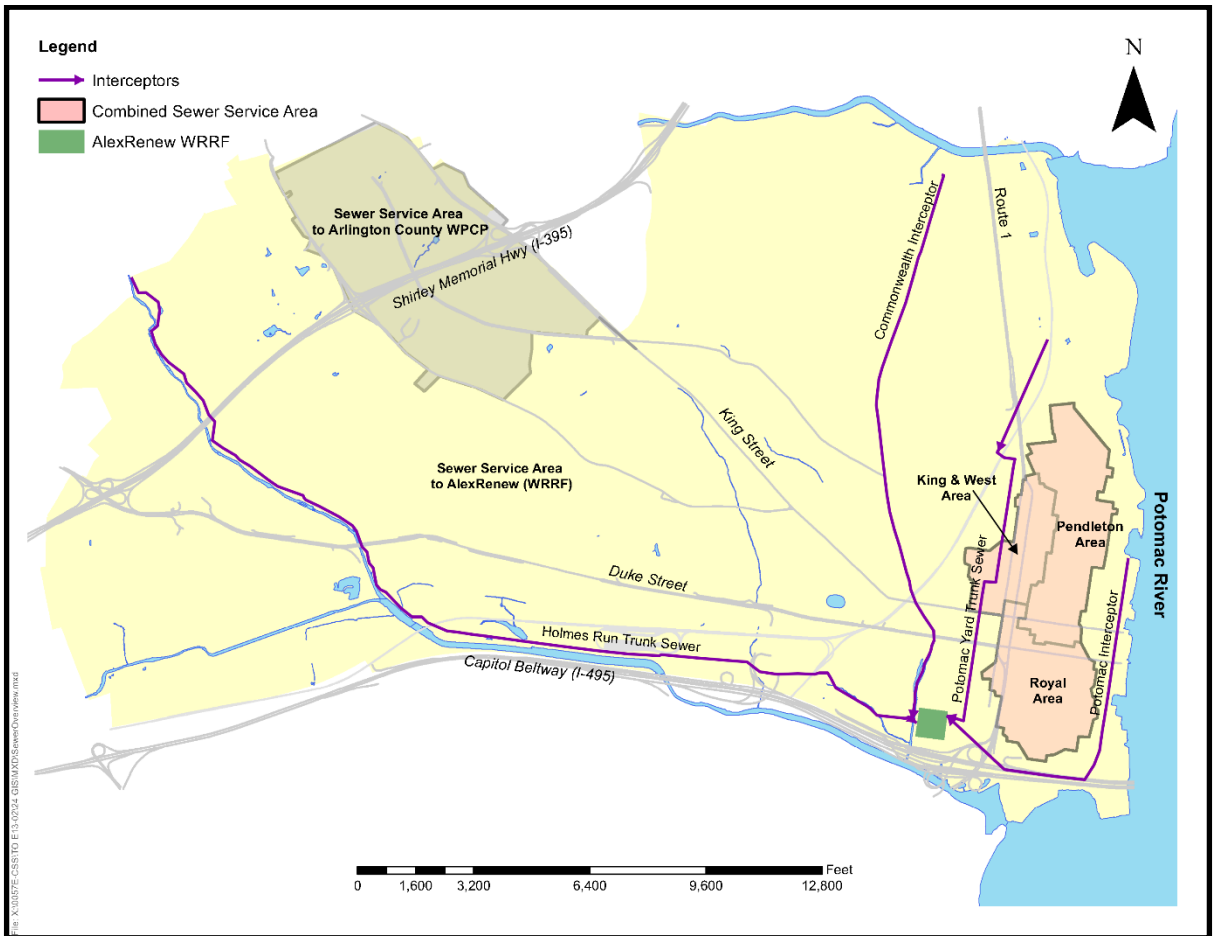

Figure 1-4
CSS Overview

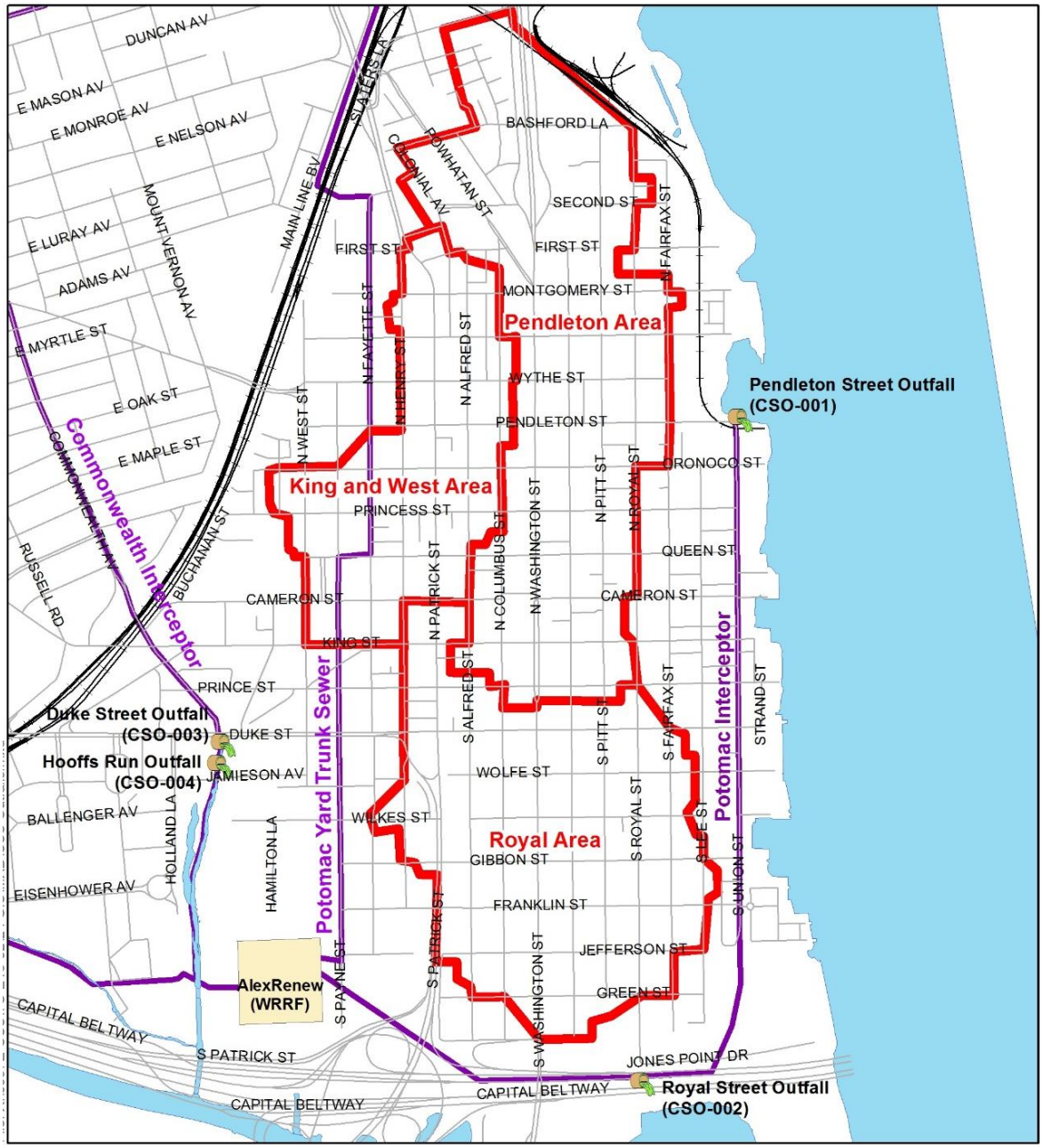

The regulator structures at each of these outfalls are configured and function differently. The CSO-001 regulator consists of a side weir which, when overtopped, discharges into Oronoco Bay during wet weather events. The CSO-002 regulator consists of a gate that closes when flows in the nearby Potomac Interceptor becomes surcharged. When this gate is closed, all flow from this CSS subarea is discharged into tidal Hunting Creek. The CSO-003 regulator consists of a transverse weir that diverts low flow into a side orifice. When flows become larger than what can be conveyed through the orifice, it overtops the weir and continues to the outfall pipe where it is discharged into Hooffs Run. The CSO-004 regulator consists of two weirs in series. When flow becomes so large that it overtops the weir and the water surface is high enough to overtop the second weir, it is discharged into Hooffs Run downstream of CSO-003.

More information about the City's existing combined sewer system can be found in the *Combined Sewer System Characterization Technical Memorandum* dated September 2014.

1.3 City's Approved LTCP (1999)

In 1999 the City developed a Long Term Control Plan (LTCP) consistent with the guidance provided in the United States Environmental Protection Agency's (USEPA) Combined Sewer Overflow Control Policy. Through extensive study and modeling it was shown that although the receiving waters are impaired, the City's CSOs do not prevent these waters from meeting designated uses. The 1999 LTCP consists of: 1) conduct proper operations and regular maintenance programs, 2) maximize use of the collection system for storage, 3) control of non-domestic discharges, 4) maximize flow to the treatment plant, 5) prohibit CSOs during dry weather, 6) control solid and floatable materials, 7) develop and implement a pollution prevention program, 8) notify the public, and 9) monitor the CSOs. These are typically known as the Nine Minimum Controls (NMCs) and are implemented in CSO systems throughout the country. This plan was submitted to the VDEQ and was approved in 1999. The City has been operating its CSS in compliance with its VPDES permit, consistent with the approved 1999 LTCP.

1.4 Hunting Creek Total Maximum Daily Load (TMDL)

On November 2, 2010, VDEQ issued Bacteria TMDLs for the Hunting Creek, Cameron Run, and Holmes Run Watersheds; these watersheds are shown on Figure 1-5. A TMDL can be thought of as a "pollution budget", in this case that pollutant is *E. coli* bacteria. The TMDL assigns bacteria loads to all the sources contributing to Hunting Creek, these bacteria loads are known as Waste Load Allocations (WLA). The WLAs in the TMDL require reductions in bacteria from all sources to meet water quality standards. Figure 1-6 shows the percent reductions required under the TMDL. Actual WLAs in colony forming units, or cfus/year, are shown on Table 1-1. It should be noted that CSO-001 is not included in the Hunting Creek TMDL. This is because CSO-001 discharges to Oronoco Bay which is not part of the Hunting Creek watershed.

Figure 1-5
Relevant Local Watersheds

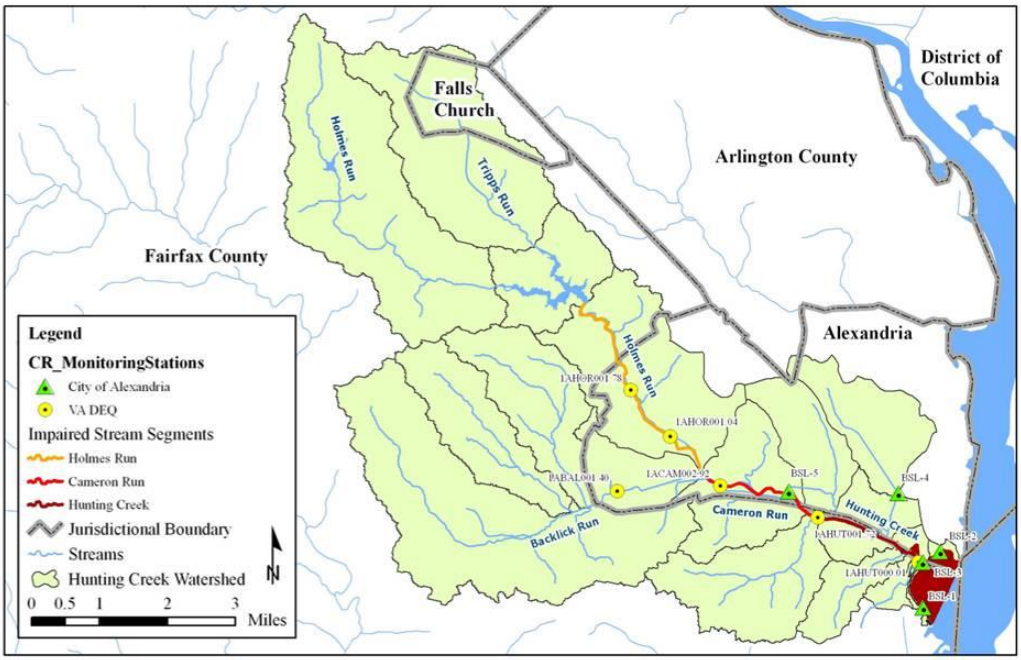

Figure 1-6
Required Reductions

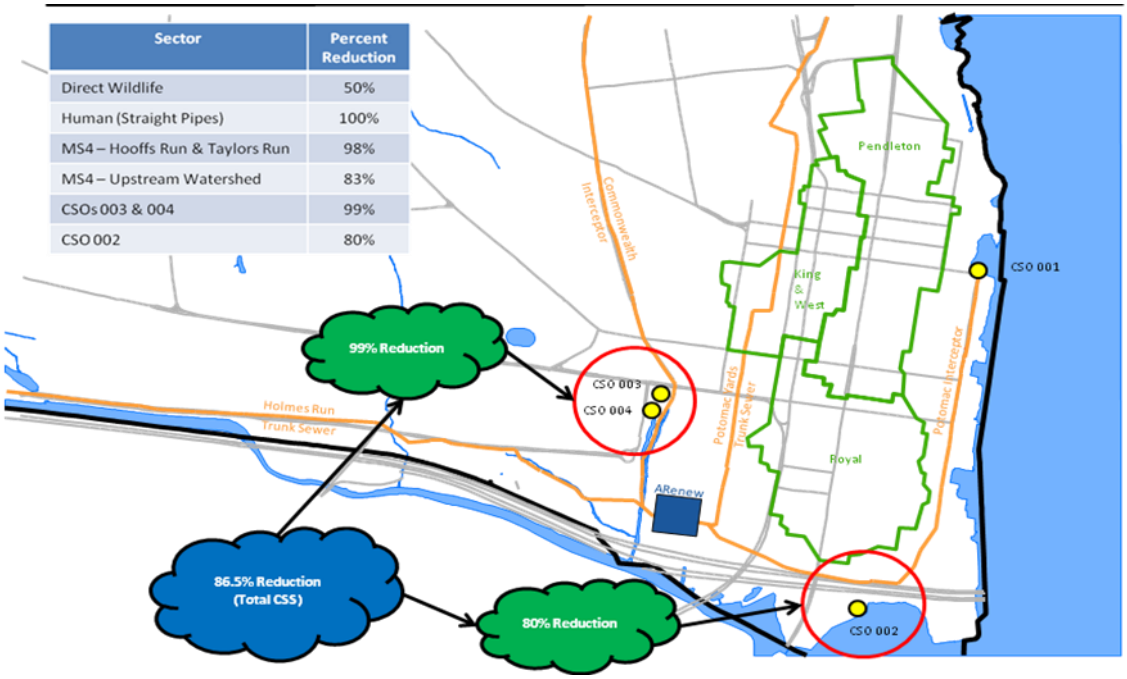

Sector	Percent Reduction
Direct Wildlife	50%
Human (Straight Pipes)	100%
MS4 – Hooffs Run & Taylors Run	98%
MS4 – Upstream Watershed	83%
CSOs 003 & 004	99%
CSO 002	80%

Table 1-1
Wasteload Allocation for COA Combined Sewer System

Permit Number	CSO Outfall	Wasteload Allocation (cfu/year)	Percent Reduction (%)
VA0087068	CSO-002	6.26E+13	80%
	CSO-003	7.68E+11	99%
	CSO-004	8.52E+11	99%
	Total	6.42E+13	86%

1.5 Purpose of the Long Term Control Plan Update (LTCPU)

In August 2013 the City received a new combined sewer system permit issued by VDEQ. One of the conditions of this permit required the City to update its existing Long Term Control Plan to meet the new Hunting Creek TMDL bacteria reductions. This Long Term Control Plan Update (LTCPU) must be submitted to VDEQ by August 23, 2016. While the City has reduced the impact of combined sewers through its approved 1999 LTCP, these measures are not adequate to meet the new requirements of the Hunting Creek TMDL. This LTCPU presents a plan which the City will implement to address the new bacteria waste load allocations for Combined Sewer Overflow (CSO) discharges to Hunting Creek. Although there are no outstanding regulatory requirements for CSO-001, the City is also including a phased approach to further reduce overflows at CSO-001 as part of the LTCPU.

The LTCPU was developed as a series of technical memoranda submitted to VDEQ dating back to May 2014. This document summarizes the details of those technical memoranda. More detail about any of the information presented below can be found in those documents, which are referenced throughout.

Section 2 Public Participation

The City developed a public participation program to disseminate information and receive feedback. The overall goal of the public participation program was to inform and educate the public about the LTCPU. Additionally, the City actively sought to involve the affected public in the City's decision making process. The specific goals for the City's Public Participation Process were:

1. **Inform:** Increase stakeholder awareness of combined sewer systems and the LTCPU project and opportunities for public participation;
2. **Educate:** Develop basic knowledge or understanding of the LTCPU project and the potential effects of decision alternatives among stakeholders; and
3. **Be Responsive:** Awareness, consideration, and responsiveness on the part of the City about stakeholders' views on the project and project alternatives.

The objectives that describe how the City went about implementing these goals included:

1. **Establish and sustain an open and transparent public participation process.** Establish and sustain an open and transparent public participation process that informs, educates and gathers feedback from external and internal LTCPU stakeholders.
2. **Create awareness and educate stakeholders.** Create awareness of water quality issues in Alexandria and increase the stakeholders' knowledge of the City's ongoing initiatives to protect the environment, enhance water quality and improve quality of life in the community.
3. **Facilitate two-way communication.** Create opportunities for two-way communication with external and internal LTCPU stakeholders that enable them to provide input and ask questions about potential LTCPU project alternatives.
4. **Identify and address stakeholder concerns and questions.** Identify and respond to concerns and questions raised by external and internal LTCPU stakeholders about potential LTCPU project alternatives.
5. **Balance stakeholder expectations.** Balance stakeholder expectations for CSO project alternatives for the costs, potential impacts to residents, businesses and visitors, time horizon, and regulatory requirements

The City has implemented several different types of public participation:

- Local Outreach
- Public Meetings
- City Council
- Technical Review Panel
- CSS Stakeholder Group
- City Website

A listing of all meetings in which staff made presentations about the LTCPU to various groups can be found in Appendix A. More information about the City's public participation plan can be found in the *Public Participation Plan Technical Memorandum* dated October 2014.

2.1.1 Local Outreach

City staff has gone to many local civic groups throughout the development of the LTCPU, beginning in October of 2013. At these meetings staff walked the groups through the LTCPU process, including the background information, reasons the LTCPU is required, CSO technologies, shortlist of CSO strategies, and the selected final plan. City staff then went back to these same local civic groups at multiple check-in points during the development of the LTCPU to provide progress updates and solicit feedback. Although not a regulatory requirement, the City believes that engaging the public as much as possible helps to produce a plan with public support.

2.1.2 Public Meetings

In addition to the local outreach, the City's combined sewer system (CSS) permit requires public meetings at specified times during the LTCPU development. Three public meetings were held during the development of the LTCPU on February 5, 2015, June 18, 2015, and April 21, 2016. Similar to the local outreach, these meetings inform the public of the LTCPU process and development. This was an opportunity for the public to provide feedback and have influence in the development of the LTCPU and the final plan. Materials from these meetings, including handouts, video of the meetings, and responsiveness summaries are available on the City website (https://www.alexandriava.gov/Sewers).

2.1.3 City Council

Throughout the LTCPU development staff provided several progress updates to City Council. These updates were presented on January 27, 2015, May 26, 2015, March 7, 2016 and May 10, 2016. During the progress updates to City Council, they first approved the shortlist of alternatives described in Section 5.2. A final presentation to City Council was made on May 10, 2016 in which all the elements of the final LTCPU were presented. Ultimately a public hearing was held on May 14, 2016 in which the public could voice their opinions before Council voted on the plan. Several members of the public made comments and Council voted to approve all the elements of the LTCPU described hereafter.

2.1.4 Technical Review Panel

While obtaining public feedback is an important part of the LTCPU process, it is also important to receive feedback from technical personnel who are familiar with combined sewer systems and the available technologies to effectively reduce the impacts of CSOs on the environment. Two independent technical review panels were convened, first on May 15, 2015 and then again on March 17, 2016. The technical review panel included representatives from other CSO communities, including DC Water, the cities of Richmond and Lynchburg, as well as an independent CSO consultant. This group has provided technical feedback related to the development of the LTCPU which has been valuable in helping the City choose the best path forward.

2.1.5 CSS Stakeholder Group

City Council passed a resolution in June 2015 that established an ad hoc stakeholder group with the charge of providing input to City staff throughout the development of the LTCPU. Thirteen (13) stakeholders were selected by the City Manager from a pool of applicants that represented constituents from civic groups, residents, several departments within the City, and environmental groups. City staff conducted a series of monthly meetings beginning in October 2015 and ending in April 2016 that walked the group through the development of the LTCPU. The feedback received has been addressed in the final LTCPU. These Stakeholder Group meetings were announced and open to the public. During these meetings questions and feedback from the public were received.

The CSS Stakeholder Group submitted a summary memorandum to City Council that generally stated their support for the LTCPU framework. Representatives from the VDEQ regularly attended these meetings. Handouts and meeting summaries are available on the City's website (https://www.alexandriava.gov/Sewers).

2.1.6 AlexEngage

In addition to all the feedback from the meetings described above, the City has also solicited feedback from the public through an online forum known as AlexEngage. The AlexEngage survey solicited specific feedback on locations and types of infrastructure proposed in the LTCPU. All the information developed and distributed to the public and the results of the AlexEngage survey can be found on the City's website (https://www.alexandriava.gov/Sewers).

Section 3 Basis of Planning

3.1 Regulatory Approaches

In order to properly evaluate CSO controls it is important to define the performance measures against which each alternative will be evaluated. The following regulatory approaches are intended to be the basis for controls on CSO-002, CSO-003, and CSO-004. CSO-001 is considered separately as it is not part of the Hunting Creek TMDL. Based on information developed as part of the *Regulatory Requirements Technical Memorandum* dated October 2014, there are four general areas of criteria have been considered in evaluating proposed infrastructure. These include:

- USEPA Presumption Approach
- USEPA Demonstration Approach
- Hunting Creek TMDL WLA
- Public Input

3.1.1 USEPA Presumption Approach

USEPA CSO policy includes capture criteria that if met it can generally viewed as an acceptable level of control. There are three presumption approach criteria:

- Presumption Option i: "*No more than an average of four overflow events per year, provided that the permitting authority may allow up to two additional overflow events per year*."
- Presumption Option ii: "*The elimination or the capture for treatment of no less than 85% by volume of the combined sewage collected in the CSS during precipitation events on a system-wide annual average basis*"; and
- Presumption Option iii: "*The elimination or removal of no less than the mass of the pollutants, identified as causing water quality impairment through the sewer system characterization, monitoring, and modeling effort, for the volumes that would be eliminated or captured for treatment under paragraph ii.*"

All the City's combined sewer control strategies proposed as part of this LTCPU provide levels of control which will exceed each criterion of the presumption approach for the respective outfalls during the typical year as described in Section 3.4.

3.1.2 USEPA Demonstration Approach

Under the EPA CSO Policy, a control level less than called for by the presumption approach can be selected if it can be demonstrated that "*the CSO discharges remaining after implementation of the planned control program will not preclude the attainment of WQS* (water quality standards) *or the receiving waters' designated uses or contribute to their impairment."* To demonstrate this, the LTCPU evaluated the alternatives using the water quality modeling developed as part of the Hunting Creek TMDL. As described in the *Water Quality Modeling Assessment Technical Memorandum* dated October 2015, the modeling assessment conducted concludes that all combined sewer control strategies selected for further evaluation meet the water quality demonstration requirements of the EPA CSO Policy stated above, provided that reasonable and appropriate corrections are made to the Hunting Creek TMDL water

quality model. Irrespective of this finding, the City chose to pursue the more aggressive levels of control under the presumption approach.

3.1.3 Hunting Creek TMDL Wasteload Allocations

As described above, the Hunting Creek TMDL calls for the City's CSOs to not discharge more than a certain loading of bacteria in a typical year. This amount is referred to as a waste load allocation (WLA). All of the City's combined sewer control strategies can meet the required WLA either through consideration of other loads or through the combination of primary and complementary strategies described in Section 7 hereafter.

3.1.4 Public Input

There were several opportunities for the public to provide feedback and input during the development of the LTCPU as described in Section 2. During this process the public input influenced the sizing of the proposed infrastructure by recommending larger sizing than required by the CSO Policy Presumption Approach. They also influenced the inclusion of green infrastructure in the LTCPU and the duration of the implementation schedule. In nearly all cases public input influenced the LTCPU regarding the final level of control.

3.2 CSS Sewershed Changes

The LTCPU considered and incorporated anticipated and future changes to the sewershed so that the CSO controls will continue to meet their long-term intended goals. In the City of Alexandria most of the sewershed is built out; however, there are redevelopment projects anticipated. As part of the requirements for redevelopment the City has implemented the Area Reduction Plan (ARP). The ARP generally requires developers to separate storm and/or sanitary sewers during new and redevelopment projects within the CSS sewershed, whenever practicable. When separation is infeasible, the project developer pays into a fund to support City-led separation projects.

Anticipated changes planned for the CSS area have been taken into account in the LTCPU. These anticipated changes include projects that are in the planning stages of development or under design, projects under construction, and projects nearing completion. For the most part, these changes can be classified into redevelopment projects or sewer system projects. Both types of projects have the opportunity to change both the amount of flow being delivered to the sewer system as well as the current configuration of the sewer system. The majority of separation projects only remove the sanitary flows from the CSS; therefore, the stormwater flows typically remain unchanged, with the exception of providing stormwater detention. More information about the future redevelopment and separation projects can be found in the *Combined Sewer System (CSS) Sewershed Changes Technical Memorandum* dated January 2015.

3.3 Flow Projections

Average daily flow projections from 2015 to 2040 were calculated for all the City of Alexandria sewersheds served by the Alexandria Renew Enterprises (AlexRenew) Water Resources Recovery Facility (WRRF) as shown on Table 3-1. Average daily flow projections establish the baseline flows in the system and serve as a basis for any wastewater storage and/or capacity planning that will occur in the future. The 2040 flow values have been used in the hydraulic model for evaluating alternatives under the City's LTCPU.

Table 3-1
Total Average Daily Flow Projections

	2015 Total Average Flow (MGD)	2020 Total Average Flow (MGD)	2025 Total Average Flow (MGD)	2030 Total Average Flow (MGD)	2035 Total Average Flow (MGD)	2040 Total Average Flow (MGD)
City of Alexandria	16.2	17.1	18.1	19.0	19.9	20.8

Peak flow projections from 2015 to 2040 were also calculated for the combined sewersheds. For the basis of the report, a simple calculation was used; the values were estimated by setting peak flows equal to the full pipe capacities of the pipes upstream and downstream of the different CSO regulator structures. Peak flows are based on a variety of factors such as specific rain events and the sewer system configuration. In addition to the total average flow, the flow projections for each of the individual sewersheds in the City was calculated based on current flows and future population projections. More information on these flows can be found in the *Flow Projections Technical Memorandum* dated September 2014.

3.4 Typical Year Selection

In accordance with the CSO Control Policy, the City used a typical year to represent long-term average design conditions for evaluating the alternatives and selecting a proposed approach for the LTCPU. Each of the alternative analyses conducted for the LTCPU were evaluated based on the typical year.

To determine the typical year, a 40-year time period from 1974 through 2013 was selected and analyzed. Hourly rainfall data recorded at Ronald Reagan Washington National Airport was used in the analysis. Next, several evaluation criteria were developed and each criteria was assigned a weighting. These criteria were developed based on rainfall characteristics and the weightings were selected based on how each characteristic contributes to CSOs. The typical assessment year evaluation criteria and weightings were developed to consider the historical rainfall that the City has received as well as to account for the City specific goals of their LTCPU; these criteria and weightings are shown in Table 3-2.

Table 3-2
Criteria Weightings

Evaluation Criteria	Weight
Annual Rainfall	30%
Back-to-Back Events	5%
Number of Events Greater than 0.10 inches	12%
Number of Events Greater than 0.25 inches	13%
Average Rainfall Duration	15%
Average Rainfall Intensity	10%
Maximum Peak Intensity	5%
Maximum Storm Size	10%

Yearly averages as well as the time period average were then calculated. The yearly averages were compared to the time-period average and ranked. Based on the weighted rankings, the year 1984 was ranked first and selected as the typical year for the LTCPU and best represents the long-term average rainfall conditions. Significantly, the year 1984 rainfall is better suited for the LTCPU than the Hunting Creek TMDL years (2004-2005) because the TMDL years contain extreme wet weather events, including an event with a return frequency equal to or greater than a 60-year storm event. This type of extreme wet weather event is outside the range of wet weather events when planning and developing CSO controls. More detailed information about the evaluation of the typical year can be found in the *Typical Year Selection Technical Memorandum* dated September 2014.

3.5 Hydrologic and Hydraulic Modeling

The City of Alexandria's hydrologic and hydraulic CSS model has been developed, updated, and maintained for over 15 years. The model was developed using GIS information, CCTV inspections, and survey information. Most recently, this comprehensive model has been coordinated with Alexandria Renew Enterprises (AlexRenew) to incorporate both the City's CSS model and AlexRenew's interceptor model to provide a unified model for the entire collection system. This allows for a more comprehensive understanding of the current conditions of the system as well as to evaluate future needs.

The model has been calibrated against multiple years of flow meter data at each of the City's CSOs as well as many points throughout combined sewershed and also in the separate part of the sewer system. The calibration and subsequent recalibrations have been conducted at multiple points throughout the development and updates to the model. The LTCPU uses the recalibration that occurred in 2013 when the CSS model was combined with the interceptor model and updated to use the XPSWMM software.

The hydrologic and hydraulic model has been used to evaluate the system's response to wet weather conditions when implementing proposed CSO controls. The CSO controls have been evaluated against the typical hydrologic year of 1984; this baseline model did not include any CSO controls and has been used to evaluate proposed CSO control alternatives that were developed as part of the LTCPU. The hydrologic portion of the model uses precipitation data from Ronald Reagan National Airport in hourly

intervals. This data was used to represent rainfall uniform across the entire sewershed, which yields a conservative estimate of flows within the system.

All CSO controls were evaluated and modeled under future flow conditions in Year 2040 as discussed above. Areas currently being separated (or separated in the near-term) from the CSS as described above had their flows removed from the CSS portion of the model and accounted for in the interceptor portion.

The hydrologic and hydraulic CSS model was used to simulate the effect each proposed CSO control technology would have once implemented within the system with respect to number and total volume of combined sewer overflows. The model results were analyzed to estimate the effect of control technologies on CSO flow rates and volumes. The results of the model runs are presented in the Infrastructure Sizing Analysis, Section 6.2 of this document.

Section 4 Preliminary Alternatives

4.1 CSO Technologies Screening

A wide range of technologies were screened to identify suitable CSO control technologies for further evaluation. The technologies considered were evaluated for their ability to meet the following primary goals: 1) bacteria reduction; 2) CSO volume reduction. Although not explicitly required by the Hunting Creek Bacteria TMDL, the following secondary goals are also considered for the various technologies: 1) improving the oxygen conditions in the waters to promote wildlife; 2) reducing floatables and litter entering the water; 3) ancillary environmental / public benefits such as increasing the urban tree canopy and/or adding more green infrastructure.

Based upon the screening of technologies, the following technologies were identified as primary technologies for detailed consideration as part of the alternatives evaluation:

- Disinfection
- Green Infrastructure
- Sewer Separation
- Storage Tanks
- Storage Tunnels
- Combinations of the above technologies

More information on the technologies screening can be found in the *CSO Control Technology Screening Technical Memorandum* dated January 2015.

4.2 Preliminary Alternatives

4.2.1 Disinfection

Disinfection of combined sewer overflows is a common practice in the United States, with facilities installed in Detroit and Boston, among others. In most cases it is not a standalone control strategy, but used in conjunction with other CSO control strategies. Various physical and chemical disinfection technologies were considered. Disinfection using sodium hypochlorite (NaOCl) as the disinfectant served as the basis for the evaluation. Disinfection would be accomplished by mixing a disinfectant with the CSO flow and holding it for a short period of time for the disinfectant to kill the bacteria (similar to bleach). Another chemical is then added to neutralize the disinfectant before discharge to the receiving waters.

When compared to the other alternatives, disinfection has some advantages in terms of requiring a small footprint and is generally low in cost; however, for the reasons provided below, disinfection was eliminated from further consideration as part of the LTCPU.

- Insufficient space to site the facilities for CSO 003/004;
- No volume reduction of the CSOs;
- No opportunity for nutrient and sediment credits;
- Only disinfects the bacteria load with no reduction in other pollutants;

- Requires delivery and storage of large quantities of strong oxidation and reduction chemicals in the urban setting of the City;
- Infrequent operation of mechanical equipment may lead to reliability challenges; and
- Deterioration of the stored sodium hypochlorite overtime due to infrequent operation.

More detailed information about disinfection as a primary strategy can be found in the *Alternatives Evaluation: CSO Disinfection Technical Memorandum* dated October 2015.

4.2.2 Green Infrastructure

Green infrastructure (GI) is a source control that reduces stormwater runoff volumes, peak flows, and/or pollutant loads by mimicking natural conditions. GI utilizes the processes of infiltration (storing rainfall so that it soaks in to the ground), evapotranspiration (trees and plants absorb the rainfall and it evaporates through the leaves, see Figure 4-1), and capture for re-use to reduce the amount of stormwater runoff volume. GI could be used as a complementary CSO control strategy in conjunction with gray infrastructure.

Figure 4-1
Evapotranspiration

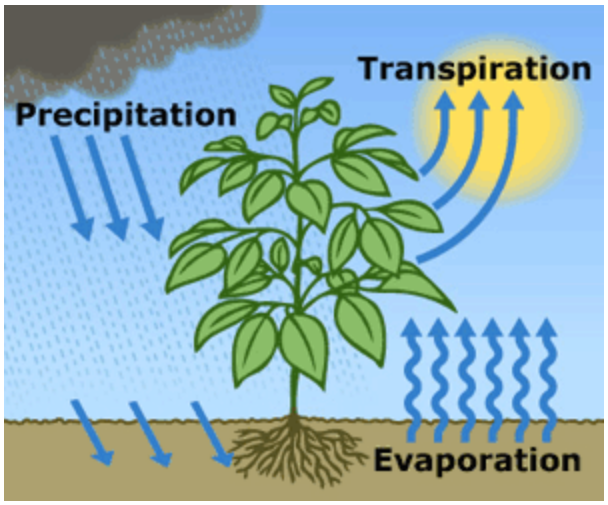

(Source: water.usgs.gov)

GI's benefits extend beyond reducing the flow of water into the CSS during wet weather events. Through mimicking a more naturalized system, GI can deliver a broad range of ecosystem services or benefits to people, some of which include: improved community livability (aesthetics and property values), human health, air quality, water quality, groundwater recharge, wildlife habitats and connectivity, reduced heat island effects, reduced energy use, green jobs, and recreational opportunities (USEPA, 2014).

GI opportunity is dependent on land use, impervious area, local topography, and underlying soils. It is important that the soils underneath GI are able to infiltrate the captured runoff; if not, then an underdrain would be needed in order to prevent the GI from filling up and flooding. The underdrain would be connected back in to the sewer system, so while it would reduce the peak stormwater flows it would not

necessarily significantly reduce the stormwater volume. Based on an evaluation of implementing GI in the CSS, it would not possible to achieve the goals of the LTCPU through implementation of GI alone; therefore, it was not selected as a primary strategy. However, GI can help to further reduce the CSO volume as a complementary strategy in conjunction with conventional gray infrastructure, along with providing other ancillary benefits. While GI was eliminated as a primary strategy of the LTCPU, it was recommended as a complementary strategy to be implemented throughout the City to help achieve the goals of the Hunting Creek TMDL. More detailed information about green infrastructure as a primary strategy can be found in the *Alternatives Evaluation: Green Infrastructure Technical Memorandum* dated October 2015.

4.2.3 Sewer Separation

Sewer separation is the conversion of a combined sewer system into separate stormwater and sanitary sewage collection systems by constructing new sanitary sewers, stormwater sewers, or both. This alternative prevents sanitary wastewater from being discharged to receiving waters and therefore prevents discharges of bacteria and floatables associated with sanitary sewage.

In 2005, the City developed the CSS Area Reduction Plan (ARP), which was amended in 2013. The ARP provides a road map for separation of storm and/or sanitary sewers as redevelopment occurs within the CSS sewershed, whenever practicable. Over the last 10-15 years the City has separated or planned for separation more than 46 acres from the combined sewer system. The ARP is tied to redevelopment projects within the combined sewer area. In order to meet the regulatory timeline as outlined in the LTCPU, certain separation projects would need to proceed independently of redevelopment.

To meet the timeline required for the LTCPU, a sewer separation only solution would require that approximately 18 acres of Old Town be separated annually on average. This would require continuous separation construction projects until 2035. In addition to being the most disruptive alternative evaluated, it is also the most expensive, costing upwards of $350 – $525 million. For these reasons, sewer separation was eliminated from consideration as a primary strategy in the LTCPU. However, separation will still occur as part of City-led projects in the Capital Improvement Program (CIP) and as a condition of most redevelopment projects and will, therefore, be retained as a complementary strategy in the LTCPU. The cost of separation related to redevelopment will typically be borne by the developer and will continue to help improve water quality. More information about sewer separation as a primary strategy can be found in the *Alternatives Evaluation: Sewer Separation Technical Memorandum* dated October 2015.

4.2.4 Storage Tanks

Storage tanks are a common and accepted technology for storage of combined sewage overflows. Storage tanks have been used in Richmond, VA, Seattle, WA and Syracuse, NY, among several others. During a rain event, the combined sewer overflow is diverted to storage tanks. After the rain event, the stored combined sewer volume is sent to a wastewater treatment facility for a high level of treatment. The storage tanks can either be constructed above ground or below ground. The storage tank(s) are located in the vicinity of the existing outfalls. Although not specific to combined sewers, underground storage tanks have been installed in the City at the Four Mile Run Pump Station located at the north end of Commonwealth Avenue.

Below ground storage tanks will be the primary combined sewer control strategy implemented for CSO-002, primarily due to its lower cost relative to the other technologies and its limited disruption to the community during construction. Storage tanks are not recommended for CSO-003/004 due to space limitations in the vicinity of Duke Street. The size of the below ground storage tank is described in the sections below. More information about storage tanks as a primary strategy can be found in the *Alternatives Evaluation: Storage Tanks Technical Memorandum* dated October 2015.

4.2.5 Storage Tunnels

Similar to storage tanks, during a rain event underground storage tunnels capture and store combined sewer overflow in the tunnel. Tunnels are constructed by digging a shaft that takes flow out of the existing sewers and diverts them into very deep tunnels, typically on the order of 100 feet below ground. Another shaft is then built to pump the stored combined sewer overflow out of the tunnel where it is then conveyed to a wastewater treatment plant for a high level of treatment. Underground tunnels are a common and accepted technology for storage and conveyance of combined sewage overflows. Across the Potomac River, DC Water is currently constructing a series of underground tunnels to mitigate their combined sewer overflows. Many other communities have installed tunnels to address their combined sewer systems, including Atlanta, Boston, and Richmond.

Storage tunnels require very large shafts to dig the tunnels and to convey the flow from the surface sewers in to the deep tunnel; these require multiple shaft construction locations. For CSO-002, tunnels are more expensive and more disruptive to the residents in the area. Therefore, the LTCPU does not recommend tunnels to address CSO-002; instead, storage tanks are recommended as described above. For CSO-003/004 there is not sufficient space to construct large storage tanks; therefore, a storage tunnel has been proposed to address CSO-003/004. The tunnel storage and relocation alternatives for CSO-003/004 considered herein are generally consistent with the ongoing wet weather improvements work between the City, Fairfax County and Alexandria Renew Enterprises (AlexRenew).

4.2.6 Combinations of Technologies

In addition to the technologies discussed above, the LTCPU also evaluated combinations of technologies. More specifically, the LTCPU evaluated implementing different technologies at different outfalls. A preliminary list of nine CSO Control Strategies was developed, these were:

- S-1. One Storage Tunnel for CSO-002/003/004
- S-2. One Storage Tunnel for CSO-002/003/004 and Outfall Relocation to the Potomac River
- S-3. Separate Storage Tunnels for CSO-002 and CSO-003/004
- S-4. Separate Storage Tanks at CSO-002 and CSO-003/004
- S-5. All Disinfection
- S-6. All Separation
- S-7. Storage Tunnel for CSO-003/004 and Storage Tank at CSO-002
- S-8. Storage Tunnel for CSO-003/004 and Disinfection at CSO-002
- S-9. All Green Infrastructure

These nine CSO Control Strategies have been evaluated against the evaluation criteria described in Section 6 and a shortlist of strategies was developed.

Section 5 Evaluation of Alternatives

5.1 Evaluation Criteria

Evaluation criteria have been developed and were used to rate each of the nine CSO control strategies presented in Section 4 during the alternatives analysis portion of the LTCPU. The evaluation criteria were developed and tailored to meet the regulatory requirements while providing a solution unique to the needs of the City of Alexandria. City-specific criteria were developed to score each alternative based on a rating of very high, high, medium, low, minimal, or none (if applicable).

The criteria presented in Figure 5-1 were assigned a weighting that was applied to each rating to determine an overall weighted rating for each alternative. The alternatives were then ranked based on the highest weighted rating. Upon completion of the alternatives evaluation a select number of alternatives, based on their ranking, were selected for further development. More information on the evaluation criteria and their development can be found in the *Evaluation Criteria Technical Memorandum* dated May 2015.

Figure 5-1
Evaluation Criteria Weightings

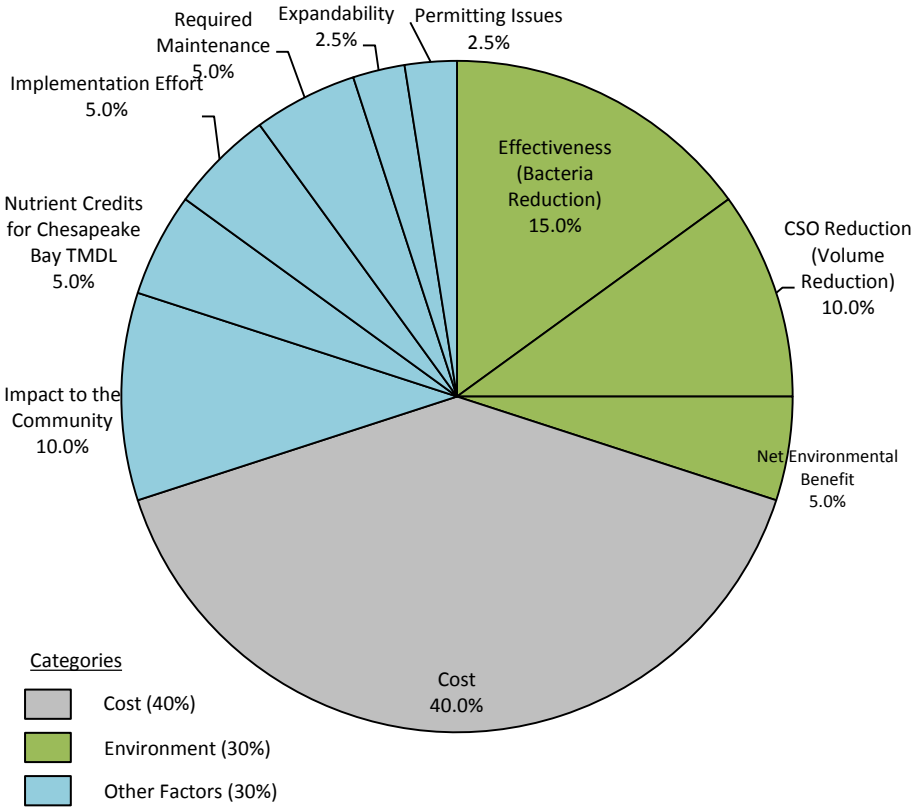

5.2 Shortlist of Alternatives Selection

As described in Section 4.2.6, nine CSO control strategies were developed and ranked using the criteria shown on Figure 5-1. Combinations of alternatives were compiled for ranking the overall CSO control strategy, which include CS0-002 and CSO-003/004 collectively. The results of the scoring and subsequent ranking of the nine CSO Control Strategies are provided in Table 5-1.

Table 5-1
CSO Control Strategy Ranking

Rank	Strategy No.	CSO Control Strategy	Score
1*	S-3	Separate Storage Tunnels for CSO 002 and CSOs 003/4	3.98
2*	S-7	Storage Tunnel for CSO 003/4 and Tank at CSO 002	3.97
3*	S-1	Storage Tunnels for CSOs 002/3/4	3.86
4	S-4	Separate Storage Tanks at CSO 002 and CSO 003/4	3.76
5	S-8	Storage Tunnel for CSO 003/4 and Disinfection at CSO 002	3.69
6	S-2	Storage Tunnels for CSOs 002/3/4 and Outfall Relocation to the Potomac	3.68
7	S-5	All Disinfection	3.34
8	S-9	All Green Infrastructure	3.23
9	S-6	All Separation	2.10

*Selected for further evaluation

The top five ranked alternatives all scored well due to their ability to store the CSO and then send it to the AlexRenew WRRF for an exceptional level of treatment. The store and treat approach allows for high levels of CSO volume reduction and bacteria reduction. Additionally, the store and treat approach provides good opportunities for the removal of additional nitrogen, phosphorous, and sediment from the Chesapeake Bay watershed.

Based on the weighted ratings of each of the alternatives, a combination of storage tank and storage tunnels was selected for further evaluation. The three primary strategies considered further were: 1) a storage tunnel for CSO-003/004 and a separate storage tunnel for CSO-002; 2) a storage tunnel for CSO-003/004 and a storage tank for CSO-002; and 3) one continuous tunnel connecting CSO-002/003/004. The recommended shortlist of three alternatives is provided in Table 5-2.

Table 5-2
Recommended Shortlist of Primary CSO Control Strategies

Strategy No.	CSO Control Strategy
S-3	Separate Storage Tunnels for CSO 002 and CSOs 003/4
S-7	Storage Tunnel for CSO 003/4 and Tank at CSO 002
S-1	Storage Tunnels for CSOs 002/3/4

These three options were further evaluated as described in Section 6.

Section 6 Evaluation and Selection of Proposed Infrastructure

6.1 Alignments and Site Evaluation

The LTCPU evaluates the project locations available to implement infrastructure for CSO-003/004 and CSO-002. Three tunnel alignments were evaluated to address CSO-003/004, three tunnel alignments were evaluated to address CSO-002, and four storage tank sites were evaluated to address CSO-002. The alignments and sites presented are concepts and there may be difficulties with the alignments at the AlexRenew site. The City will need to obtain permissions for preliminary work and easements for any long term work/structures on AlexRenew properties.

6.1.1 CSO-003/004 Tunnel Alignments

The three potential tunnel alignments for CSO-003/004 are presented in Figure 6-1.

Figure 6-1
CSO-003/004 Tunnel Alignments

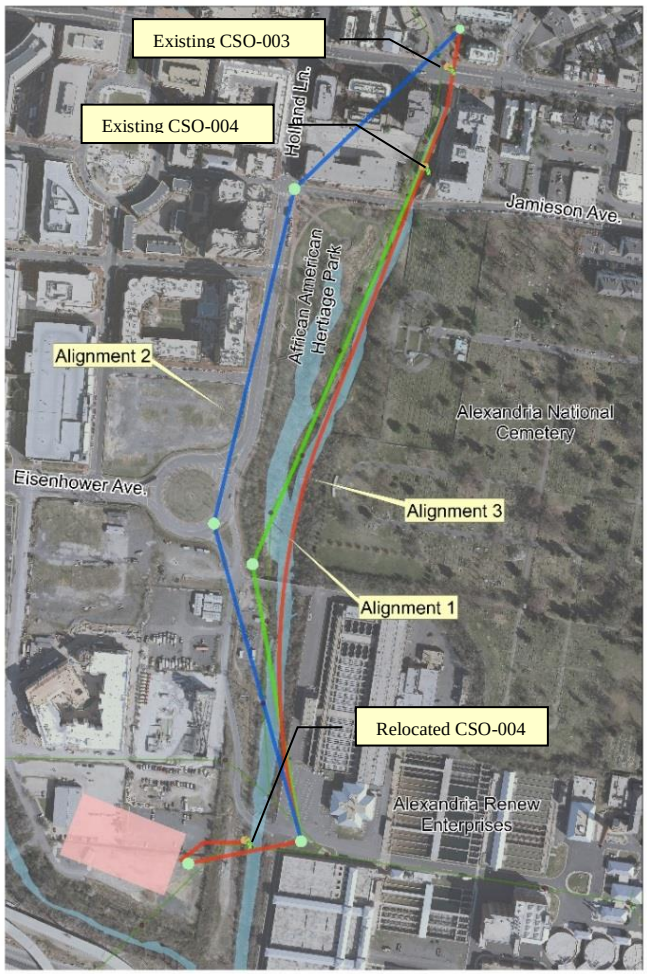

6.1.1.1 CSO-003/004 Tunnel Alignment 1

This alignment consists of a tunnel that begins at the upstream dropshaft which would be 20-feet in diameter. At this point the tunnel is approximately 80 feet underground. The tunnel continues south underneath Hooffs Run through the Alexandria African American Heritage Park to a turning dropshaft located inside the park just northeast of the intersection of Holland Lane and the entrance to AlexRenew. From the turning dropshaft, the tunnel continues straight southeast to the AlexRenew dropshaft. The total length of this alignment is approximately 2,750 feet. This alignment does not pass underneath any buildings or structures; however it does pass adjacent to a Dominion Virginia Power high voltage electrical easement as well as a substation. Refer to Figure 6-1 for a representation of the alignment.

6.1.1.2 CSO-003/004 Tunnel Alignment 2

Alignment 2 is a tunnel that begins at the upstream dropshaft which would be 20-feet in diameter. The tunnel continues straight southwest to a second dropshaft located in the intersection of Holland Lane and Jamison Avenue. This dropshaft is approximately 85 feet deep and 30 feet in diameter. This portion of the alignment passes underneath several buildings and a parking garage. The alignment then continues due south to a third dropshaft approximately 100 feet deep and 30 feet in diameter located in the southern portion of the Eisenhower traffic circle. The dropshaft is shown in the traffic circle because there are plans under development to remove the traffic circle and put in a T-type intersection. This dropshaft is sited so that it will not interfere with the future T-type intersection. The 8-foot tunnel then continues southeast underneath the Dominion Virginia Power substation to the AlexRenew dropshaft. The total length of this alignment is 2,925 feet. Refer to Figure 6-1 for a representation of the alignment.

6.1.1.3 CSO-003/004 Tunnel Alignment 3

Alignment 3 is a tunnel that begins heading south out of the upstream dropshaft which would be 20-feet in diameter. It continues straight under Hooffs Run for approximately 1,325 feet as which point it starts to bend southeast with a 3,000-ft bend radius. The tunnel then ends at the AlexRenew dropshaft. The total length of this alignment is approximately 2,700 feet. This alignment does not pass under any buildings or structures and does not traverse under the African American Heritage Park or the cemeteries. Refer to Figure 6-1 for a representation of the alignment.

Based on the evaluation criteria as described in the *Alignment and Siting Evaluation Criteria Technical Memorandum* dated October 16, 2015, the following weighted ratings were developed.

Table 6-1
CSO-003/004 Alignments Weighted Ratings

Alignment	Weighted Rating
Alignment 1	3.45
Alignment 2	2.45
Alignment 3	4.10

Based on these ratings, Alignment 3 is the preferred alignment for CSO-003/004 primarily because it eliminates one of the shafts and does not impact private or park property. Alignment 1 is retained in the final LTCPU should issues arise with Alignment 3 during design. Alignment 2 is eliminated from further

consideration because it is the most expensive alignment, passes underneath several buildings, and passes underneath a Dominion Virginia Power substation all of which are not desirable when constructing the tunnel.

6.1.2 Upstream Dropshaft Location

With all of the proposed alignments for the CSO-003/004 tunnel an upstream dropshaft location needed to be determined to divert the flows from CSO-003 and CSO-004 into the tunnel. For the upstream dropshaft, four locations were considered in the vicinity of the CSO-003 and CSO-004 outfalls as shown in Figure 6-2:

- Location 1 – In the middle of Daingerfield Road near Duke Street
- Location 2 – In the middle of Duke Street
- Location 3 – In the middle of Peyton Street
- Location 4 – In the parking lot of 1501 Duke Street

Figure 6-2
Potential Upstream Dropshaft Locations

Through the evaluation described in the *Alignments and Site Evaluation Technical Memorandum* dated June 2016, it was determined that Location 4 was the most feasible location for the upstream dropshaft.

6.1.3 CSO-002 Tunnel Alignments

For combined sewer strategies S-1 and S-3, three potential alignments were evaluated for CSO-002. Each of these three alignments consisted of a longer tunnel connected to the CSO-003/004 tunnel (Strategy S-1) and a shorter tunnel separate from the CSO-003/004 tunnel (Strategy S-3). The connected tunnel would allow for a single dewatering pump station at the AlexRenew WRRF; however, it would require more complex hydraulic control feature to prevent bacteria load from being transferred from CSO-002 to Hooffs Run. Figure 6-3 and Figure 6-4 present the connected and separate tunnel alignments.

Figure 6-3
CSO-002 Connected Tunnel Alignments

Figure 6-4
CSO-002 Separate Tunnel Alignments

Based on the evaluation criteria as described in the *Alignment and Siting Evaluation Criteria Technical Memorandum* dated October 16, 2015, the following weighted ratings were developed.

Table 6-2
CSO-002 Alignments Weighted Ratings

Alignment	Weighted Rating
Alignment 1	3.80
Alignment 2	3.30
Alignment 3	3.65

Based on these ratings, Alignment 1(for both the connected tunnel and separate tunnel) is the preferred alignment should a tunnel for CSO-002 be considered. Alignment 1 scored higher because there are no known utility conflicts, no easements would be required, and no property acquisition would be required, while Alignment 2 and Alignment would require easements and/or property acquisition. Alignment 2 and Alignment 3 have been eliminated from further consideration.

6.1.4 CSO-002 Storage Tanks

Four alternative storage tank locations were evaluated as shown in Figure 6-5.

Figure 6-5
CSO-002 Storage Tank Sites

6.1.4.1 CSO-002 Tank Alternative 1

CSO-002 Tank Alternative 1 is located on private property (Bridgeyard Apartments, previously known as Hunting Pointe) and within a resource protection area (RPA). New piping will need to be constructed from the existing CSO-002 to the tank and a new overflow pipe will need to be constructed from the tank to the receiving water. This could allow for some public amenity to be constructed on top; the amenity would need to be coordinated with the land owner.

6.1.4.2 CSO-002 Tank Alternative 2

Tank Alternative 2 is located in the cul-de-sac and the southernmost end of Royal Street. This tank is located completely within the City right-of-way, although during construction there will be restricted public access to Jones Point Park. The top of the tank will be located below the ground surface and will be designed to allow car and truck traffic to drive on top of it. It is important that once constructed the

tank does not limit access to Jones Point Park or access to the facilities located underneath the Woodrow Wilson Bridge.

6.1.4.3 CSO-002 Tank Alternative 3

Tank Alternative 3 is located directly on the end of the existing CSO-002 outfall and in the embayment itself. This tank relocates the overflow location farther out into the embayment. While permitting such a tank could be challenging, this type of tank has many advantages. First, the tank is not located on any known private property, city street, or national park. Second, the tank can be designed in such a way that public amenities could be placed on top. Third, the tank allows the City to improve waterfront access for the public. Finally, as part of the construction, there is an opportunity to make improvements to the embayment and shoreline that would otherwise be very disruptive.

6.1.4.4 CSO-002 Tank Alternative 4

Tank Alternative 4 is not designed as a traditional tank. This alternative utilizes the alignment of the Jones Point Park road as the basis for the tank shape. This tank could be constructed as a series of side-by-side box culverts rather than cast in place concrete. The shallow depth also makes excavation and construction much easier than the other deep tanks. In order to construct such a tank, the City will need to negotiate with the National Park Service.

Based on the evaluation criteria as described in the *Alignment and Siting Evaluation Criteria Technical Memorandum* dated October 16, 2015, the following weighted ratings were developed.

Table 6-3
CSO-002 Storage Tanks Weighted Rating

Alternative	Weighted Rating
Tank Alternative 1	4.10
Tank Alternative 2	4.20
Tank Alternative 3	4.25
Tank Alternative 4	3.85

Due to the ratings being so close to each other and the anticipated phasing of construction for the CSO-003/004 infrastructure and the CSO-002 infrastructure, all storage tank sites are retained in the LTCPU. Following the construction of the CSO-003/004 tunnel the tank sites will be evaluated in depth and a final storage tank site will be recommended.

6.1.5 CSO-002 Tunnels vs Storage Tanks

While preferred tunnel alignments and tank sites for CSO-002 were evaluated, only one is recommended as part of the LTCPU. By looking at the weighted ratings for tunnels and tanks, all of the storage tank alternatives have a higher rating than tunnel Alignment 1. This is primarily due to the cost and complexity of constructing a tunnel instead of a storage tank; however, there are other factors that make storage tanks more desirable than tunnels for CSO-002:

- Public Disruption – Disruption to the residents is a very important factor to consider when selecting tunnels versus tanks. Tunnels would require construction at every location there is a shaft, so there would need to be multiple construction areas throughout Old Town. Additionally, some of these shaft are located at or near intersections and would require likely require closure of roads and detouring of traffic while construction is ongoing. Whereas a storage tank only requires construction at one location limiting disruption to the residents.
- Duration of Construction – Not only would tunnels require construction at multiple locations throughout Old Town, the tunnel construction could potentially take significantly longer than construction of a storage tank (up to 2 years longer).

6.1.6 Recommendation

Based on the weighted ratings and the additional disruption of constructing a tunnel, storage tanks are retained as the primary strategy for CSO-002 in the LTCPU; tunnels are eliminated from further consideration at this time. The LTCPU recommends Alignment 3 as the preferred tunnel alignment to address CSO-003/004 and all storage tank alternatives are retained to address CSO-002. Additional information regarding the location of the proposed infrastructure can be found in the *Alignments and Site Evaluation Technical Memorandum* dated June 2016.

6.2 Infrastructure Sizing Analysis

Once the primary strategy of the combined sewer infrastructure was selected, an evaluation of the storage volume relative to potential benefits, costs, and other impacts was performed. The regulatory drivers for the water quality benefits as well as the potential impacts on the receiving waters of different storage sizes are evaluated below. Tunnel sizes evaluated for CSO-003/004 include:

- 1.0 million gallons (8-foot diameter tunnel)
- 1.6 million gallons (10-foot diameter tunnel)
- 2.3 million gallons (12-foot diameter tunnel)

Storage tank sizes evaluated for CSO-002 include:

- 2.0 million gallons
- 3.0 million gallons
- 4.0 million gallons

The 1.0 million gallon storage tunnel for CSO-003/004 and the 2.0 million gallon storage tank for CSO-002 are the minimum sizes required to meet the regulatory requirements related to the USEPA CSO Control Policy discussed in Section 3.1.1. To assess the additional potential benefit by providing larger tunnels and tanks the following are assessed:

- Number of Overflows per year
- Percent CSO Capture
- Potential Recreational Benefit

The infrastructure sizes described in this section, both volume and tunnel diameters, are based on performance associated with storing the combined sewer flows and then sending it to AlexRenew for treatment after the rain event.

6.2.1 Overflow Evaluation

Table 6-4 summarizes the physical characteristics for the tunnel diameters of the CSO-003/004 tunnel alignment(s) as well as the impacts on the overflows.

Table 6-4
CSO-003/004 Tunnel Diameter Summary

Tunnel Diameter	Tunnel Volume (MG)	Number of Overflows[1]	Volume of Overflows (MG)	Overflow Reduction[2] (%)	Flow Capture[3] (%)	NPW[4] ($M)
Current Conditions (no tunnel)	-	67	29.1	-	75%	-
8-foot	1.0	5	2.9	90%	98%	$75.5
10-foot	1.6	3	1.1	96%	99%	$82.6
12-foot	2.3	0	0	100%	100%	$92.7

Table 6-5 summarizes the physical characteristics as well as the impacts on the overflows at CSO-002 for three tank sizes during the typical year.

Table 6-5
CSO-002 Tank Volume Summary

Tank Volume (MG)	Number of Overflows[1]	Volume of Overflows (MG)	Overflow Reduction[2] (%)	Flow Capture[3] (%)	NPW[4] ($M)
Current Conditions (no tank)	48	35.8	-	58%	-
2.0	6	5.7	84%	93%	$25.9
3.0	2	3.1	91%	96%	$35.3
4.0	1	1.9	95%	98%	$44.1

6.2.2 Water Quality Evaluation

In addition to evaluating the impact on the volume and number of overflows, an evaluation of the potential impact on water quality was performed. This was done by comparing the *E. coli* bacteria concentrations modeled in the receiving waters against the State's Beach Advisory Criterion. The Virginia Beach Advisory Criterion is a bacteria criterion that the state health department uses to assess the

[1] Acceptable range of overflows is 4-6 or less for the typical year under the EPA CSO Policy
[2] No Criteria under the EPA CSO Policy. This represents the percent reduction from the current modeled volume of overflows in the typical year.
[3] Minimum 85% capture under the EPA CSO Policy
[4] The Net Present Worth is estimated based on a 20 year period and a 3.0% discount rate. The NPW includes the capital costs and annual O&M. These are planning level costs with an accuracy of -30 to +50%.

safety of recreational use of waters. The criterion advisory limit is set at 235 cfu/100mL, so any water samples that have a value higher than that, the local municipality should issue an advisory. It is important to note that occasional exceedance of this criterion does not mean the WQS is not obtained. The evaluation showed that there are twelve wet weather events in the TMDL period (2004-2005) in which the beach closure criterion is exceeded when all bacteria source controls (stormwater, human, and wildlife controls) are implemented in addition to the proposed CSO controls. Based on the evaluation performed of the twelve events, only two (the event on June 29, 2005 and the event on July 8, 2005) could potentially be eliminated by implementing additional CSO controls. The baseline CSO controls of an 8-foot diameter tunnel for CSO-003/004 and 2.0 million gallons of storage for CSO-002 would need to be increased by 15% in order to potentially remove the two events above. Regardless of implementing additional CSO controls, ten events that exceed the beach closure criterion would still remain because of the other sources of bacteria. It should be noted that the potential recreational benefits attributable to CSO controls will not be realized until stormwater and other controls are also in place. In addition, while larger controls will remove incrementally more CSO in terms of percent capture and number of events, the additional recreational benefit will be difficult to observe.

As stated above, it is important to note that this evaluation assumes that all other controls have already been implemented, including stormwater, human, and wildlife. Even if the CSO storage facilities are constructed, there will not be any significant attainment of water quality standards or discernable recreational benefit as measured by the advisory criterion until all the other controls are implemented as well. However, the control strategies evaluated can all meet the TMDL CSO WLA in combination with planned sewer separation, green infrastructure, and the efficiency of the operation of the proposed storage tank and tunnel in conjunction with treatment of wet weather flows at the AlexRenew WRRF.

6.2.3 Recommendation

Based on the evaluations performed as part of the LTCPU a tunnel to store and convey 1.6 million gallons for CSO-003/004 and a 3.0 million gallon storage tank for CSO-002 are recommended. The storage tank options can be designed for expansion should the City wish to construct additional storage in the future. Additional detailed information on the sizing evaluation can be found in the *Infrastructure Sizing Analysis Technical Memorandum* dated June 2016.

Section 7 Recommended Plan

The overall LTCPU framework can be thought of as a pyramid as shown in Figure 7-1. The base of the LTCPU is the store and treat strategy that will reduce the loading from CSO-002, CSO-003, and CSO-004 to meet the CSO Presumption Approach criteria. For ease of reference, that level of control will likely reduce CSO events from approximately 50-70 per year down to 4 or fewer overflows during the typical year. In addition to the store and treat infrastructure, green infrastructure, targeted sewer separation, and other potential opportunities will be implemented as complementary strategies that will help to reduce the volume of overflows even further to achieve consistency with the City's Hunting Creek TMDL WLA.

Figure 7-1
LTCPU Framework

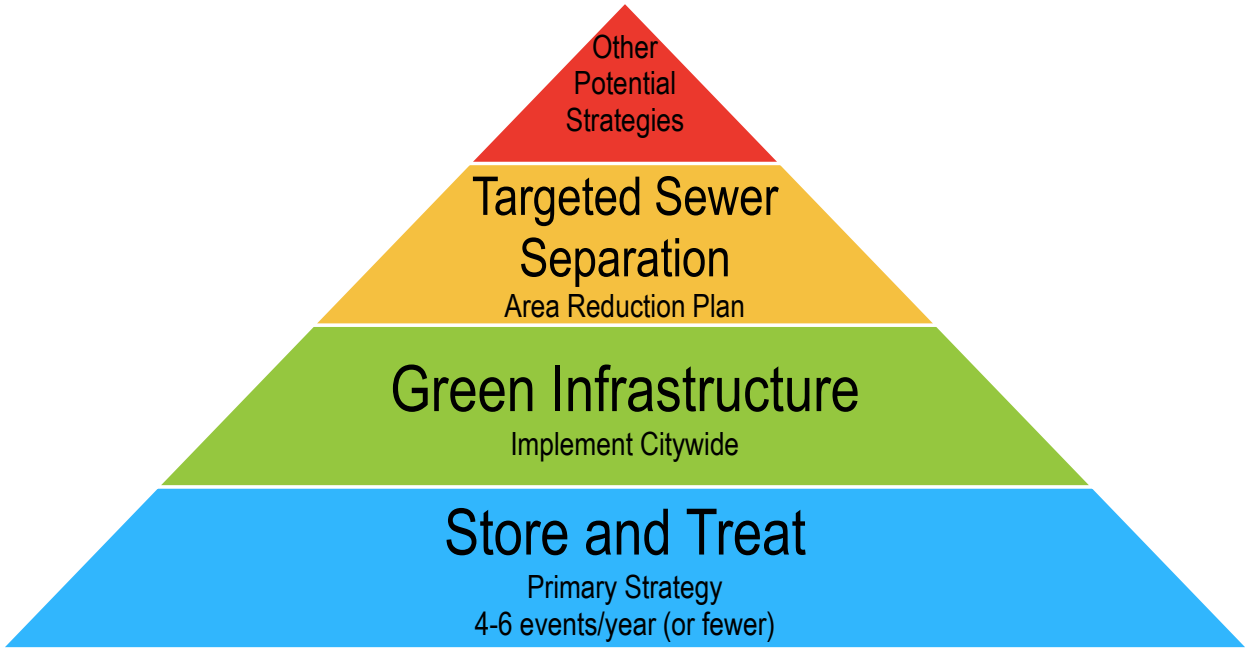

7.1 Store and Treat

As described in the previous sections a storage tunnel is recommended for reduction of combined sewer discharges from CSO-003/004 and a storage tank is recommended reduction of combined sewer discharges from CSO-002.

7.1.1 CSO-003/004 Storage Tunnel

A 1.6 million gallon storage and conveyance tunnel is recommended for reduction of combined sewer discharges from CSO-003 and CSO-004. This tunnel consists of three dropshafts, one located at the upstream end to receive flow from CSO-003 and CSO-004, one located on the AlexRenew site to provide hydraulic control, and a third shaft located adjacent to AlexRenew's Nutrient Management Facility to act as a wet well for the wet weather pump station. Should the CSO-003/004 storage tunnel become full

during a wet weather event, excess flow will either be directed to the relocated CSO-004 outfall by gravity, or if needed, the wet weather pump station will be used to pump excess flow to the relocated CSO-004 in order to mitigate basement backups. CSO-004 will be relocated from its current location just south of Duke Street, to the proposed location in the vicinity of the AlexRenew WRRF. Benefits for relocating the outfall include:

1. The outfall needs to be located near the wet weather pump station which will be located on the west side of the AlexRenew WRRF site.
2. The current location of the CSO-004 outfall is upstream of the African American Heritage Park, the new location will be located downstream of the park. By relocating the outfall downstream of the park, it should limit the public's potential contact with the infrequent combined sewer overflow in the stream.

This operation will achieve the presumption approach level of control (greater than 85 percent capture as well as 4-6 overflows per typical year[5]) and together with green infrastructure and targeted sewer separation will achieve consistency with the Hunting Creek TMDL. An overview of the storage tunnel alignment is shown in Figure 7-2. Facilities shown in Figure 7-2 are provided for feasibility and cost estimating purposes. Site layouts will be further refined and optimized during detailed design. Conceptual design drawings, including plan, profile, and detail sheets can be found in Appendix B.

[5] The City's preliminary engineering indicates an expectation of having 4 or fewer overflows per year; however the presumption approach criteria allows for no more than 4-6 overflows per year during the typical year. The recommended plan will also achieve greater than 85 percent capture of wet weather flows.

Figure 7-2
CSO-003/004 Proposed Storage Tunnel Alignment

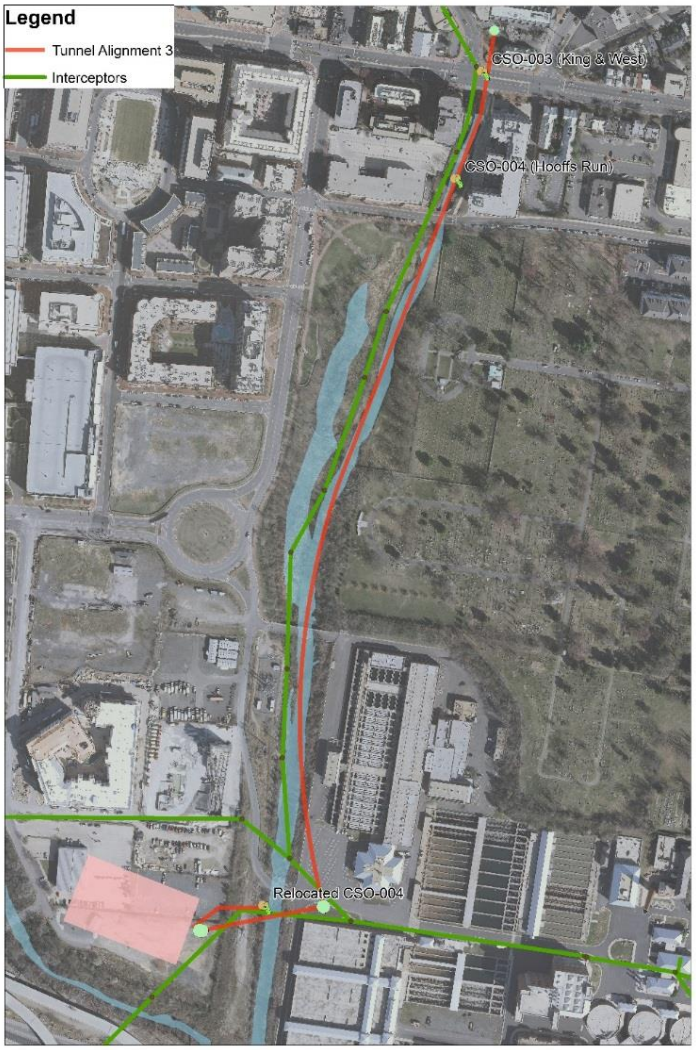

7.1.2 CSO-002 Storage Tank

A 3.0 million gallon below ground storage tank is recommended for reduction of combined sewer discharges from CSO-002. This tank could be located at one of four locations shown in Figure 7-3 as the final tank location will be determined at a later date. With 3.0 million gallons of storage it is anticipated that overflows from CSO-002 will achieve the presumption approach level of control (4-6 overflows per year and/or greater than 85 percent capture[6]) and together with GI and Targeted Sewer Separation will

[6] The City's preliminary engineering indicates an expectation of having 4 or fewer overflows per year; however the presumption approach criteria allows for 4-6 overflows during the typical year or greater than 85 percent capture of wet weather flows.

achieve consistency with the Hunting Creek TMDL. Conceptual design drawings, including plan, profile, and detail sheets can be found in Appendix C.

Figure 7-3
CSO-002 Proposed Storage Tank Locations

7.2 Green Infrastructure

A GI strategy was evaluated and developed as part of the LTCPU. This included evaluation of regulatory requirements, GI strategies in other cities, development of GI strategy options specific to the City of Alexandria, as well as collaboration with various stakeholders. While GI cannot be used to meet the goals of the Hunting Creek TMDL on its own, it can be used to reduce the stormwater entering the combined sewer system over time and provide other ancillary benefits for the community. A GI strategy that provides the City with flexibility to install GI citywide while exploring options for implementation within the CSS areas will serve as the best approach to maximizing GI benefits, minimizing costs, and minimizing potential adverse impacts during construction.

7.2.1 Green Infrastructure Strategy

GI is incorporated in the LTCPU as a complementary strategy that will be implemented citywide, both through City-led projects and encouraged as part of redevelopment projects. The City will continue with

the existing green infrastructure demonstration program included in the current permit cycle (2013-2018). Over the following permit cycles, anticipated to begin in 2018, the City will continue with the implementation of the demonstration projects, and as part of the LTCPU, $5-7.5 million in additional funding will be committed for City-led green infrastructure projects. The effectiveness of GI will also assessed following the implementation of demonstration projects. Following the performance evaluation of the GI a determination will be made as to how much money will be spent on GI in the future. The implementation and assessment will include the following:

- Funding in the City's 10-year Capital Improvement Plan (CIP) to implement GI projects for further assessment;
- Evaluate incentives programs for private developers and property owners; and
- Evaluate increasing number of trees and tree canopy in the CSS area.

Toward the end of each five-year permit cycle, the City will assess the cost and effectiveness of the GI program. At the end of the assessment, the City will consider adapting the program to include establishing program and target goals for future permit cycles based on the assessment.

7.3 Targeted Sewer Separation

In addition to GI as a complementary strategy, targeted sewer separation is also incorporated as a complementary strategy. As described in Section 4.2.3, separating all of the combined sewer system would be very expensive and extremely disruptive to the residents and businesses of Old Town. This does not mean that sewer separation is not beneficial. While storage tunnels and tanks are used as the primary strategy for the LTCPU there will still be overflows during the typical year. Targeted sewer separation where it is most beneficial can be used as a complementary to further reduce these overflows over time. The City currently has a program for separating combined sewers, whenever practicable, as a condition of redevelopment and will continue to implement this moving forward. In addition, the City will leverage Small Area Plans (SAPs), including the ongoing Old Town North SAP, that will evaluate sewer separation on a system-wide basis in order to facilitate separation projects as redevelopment occurs over a period of time. The City has specifically allocated funds for targeted sewer separation every year in the City's Capital Improvement Plan.

7.4 Other Strategies

7.4.1 Real Time Control

One example of other strategies that could be implemented is real-time controls (RTC). Real-time controls are methods of reducing overflows by making adjustments to the system dynamically as flows in the system are changing. Typically this is done using pumps, gates, and inflatable dams installed at or near the existing overflows and operated during storm events. Real-time controls can be used to compliment the infrastructure proposed and can be used to optimize the infrastructure sizing and overall performance. Real time controls will be investigated for infrastructure optimization and cost savings and potentially implemented during the design phase of the LTCPU for the CSO-003/004 storage tunnel and the CSO-002 storage tank.

7.5 CSO-001 Strategy

CSO-001 is not addressed under the Hunting Creek TMDL. Moreover, there is no regulatory requirement to further reduce overflows at CSO-001 (Pendleton). However, the City of Alexandria has decided to incorporate additional controls for CSO-001 in the LTCPU using the approach as follows:

- CSO-001 Phase I – Continue sewer separation and implement green infrastructure in the Pendleton sewershed to reduce overflows at CSO-001 over time. Additionally, the City will conduct a feasibility study of additional controls for CSO-001 during the 2018-2023 permit cycle. The feasibility study will take into account existing infrastructure and utilities, permitting issues and environmental issues in order to determine which locations would be most suitable to construct future combined sewer infrastructure.
- CSO-001 Phase II – Beginning in 2026, assess the level of control following substantial completion of the CSO project for CSO-003 and CSO-004, performance of CSO-001 Phase I, and future regulatory requirements. This assessment will include engineering analyses that will recommend future infrastructure (potentially a store and treat strategy) to address remaining overflows at this outfall. Also, planning level costs, rate impacts and timeline option(s) for implementation will be provided.

Section 8 Operational Plan

The operational plans for the main control elements of the CSO-003/004 storage tunnel and the CSO-002 storage tank are described in this section and include the following:

- CSO 003/004 Storage Tunnel
  - Diversion Structures
  - Shafts
  - Storage Tunnel
  - Hydraulic Grade Line (HGL) Control Structure
  - Wet Weather Pump Station
  - New CSO-004 Outfall Structure

8.1 CSO-002 Storage Tank CSO 003/004 Storage Tunnel Facilities

A graphic representation of the items described in the following sections can be found on the conceptual design drawings in Appendix B.

8.1.1 Diversion Structures

- A new CSO-003 diversion structure is anticipated in the vicinity of Peyton Street and Duke Street to divert combined sewer overflow from the existing CSO-003 Outfall to the CSO-003/004 storage tunnel via a new gravity sewer which discharges to the tunnel at the upstream drop shaft (Shaft 1).
  - The existing CSO-003 diversion structure will remain in service for CSO discharges during extreme weather events. Based on the initial evaluation that has been performed on the CSO-003/004 storage tunnel and wet weather pump station, it is anticipated that CSO-003 will activate during wet weather events with return frequencies greater than 2 to 5 years, pending the final sizing of the wet weather pumping station.
  - A sluice gate is anticipated in the new diversion sewer downstream of the new CSO-003 diversion structure and could be used to isolate and prevent CSO-003 flow from entering the tunnel system when the capacity of the wet weather pump station is exceeded.
- A new diversion structure is anticipated at Duke Street and Dangerfield Road to divert combined sewer overflow from the existing CSO-004 outfall to the CSO-003/004 storage tunnel via a new gravity sewer which discharges to the tunnel at the upstream drop shaft (Shaft 1).
  - The existing Duke Street siphon chamber could be modified to include a wall opening to allow for wet weather diversion to the new diversion structure.
  - The existing CSO-004 outfall could be removed from service by installing a plug in the 27-inch outfall discharge pipe at the existing Duke Street siphon chamber.

- CSO-004 will likely be relocated downstream of the new wet weather pump station located at the AlexRenew WRRF site.

8.1.2 Shafts

The CSO control facilities include three shafts with the following operational functions:

- A 20-ft diameter drop shaft (Shaft 1) is anticipated to be located at the upstream end of the tunnel.
  - The drop shaft at this location serves as a discharge connection point for the diversion sewers from CSO-003 and CSO-004 outfall sewers to the storage tunnel and also provides access for odor control ducts and ventilation of tunnel.
  - Shaft 1 will serve as a retrieval point for tunnel boring machine during construction.
- A 30-ft diameter shaft (Shaft 2) is anticipated to be located downstream of Shaft 1 and will be below the new Screenings, Odor and Ventilation Facility building at the AlexRenew WRRF site as shown on the conceptual drawings in Appendix B.
  - The drop shaft at this location serves as a discharge connection point for the diversion of overflow from the Commonwealth Interceptor at the newly installed Hydraulic Grade Line Control structure.
  - It also provides a second access for odor control ducts and ventilation of tunnel from the odor and ventilation control facilities also house within the new Screenings, Odor and Ventilation Facility building.
  - Climber screens will be installed on the tunnel upstream of the Wet Weather Pump Station for the control of solids and floatables. The climber screens will be accessible from this shaft for cleaning and maintenance.
  - Dewatering of the tunnel will be carried out from this shaft via the duplex pumps after the wet weather event has passed.
  - Shaft 2 will serve as an access point for launching of the tunnel boring machine during construction.
- A 15-ft diameter shaft (Shaft 3) is anticipated downstream of Shaft 2 and will be the terminal point for the tunnel.
  - The 72-inch influent sewers to the Wet Weather Pump Station will be connected to the tunnel at Shaft 3.
  - This structure will also serve as the connection for the 60-inch passive gravity relief sewer bypass for the Wet Weather Pump Station in the event of a pumping system malfunction.

8.1.3 Storage Tunnel

The 1.6 million gallon, 80-100 foot deep tunnel will provide in-line storage and conveyance for combined sewage.

- During wet weather events flow from the existing CSO-003 and CSO-004 outfall sewers will be diverted to the tunnel through connecting diversion structures, sewers, and drop shafts.
- The storage tunnel considered herein is generally consistent with the ongoing wet weather improvements work between the City, Fairfax County, and AlexRenew.

8.1.4 Hydraulic Grade Line (HGL) Control Structure

A hydraulic grade line (HGL) control structure is anticipated on the 72-inch Commonwealth Interceptor (CI) downstream of the existing Hooffs Run Junction Chamber (HRJC).

- The HGL structure will have an overflow weir wall installed in order to provide hydraulic control.
- Overflow from the Commonwealth Interceptor will be discharged to the CSO-003/004 tunnel via a gravity sewer connection at Shaft 2, which is located in the Screenings, Ventilation and Odor Control Facility Structure. This will provide relief from basement backups and sewer surcharging.

8.1.5 Wet Weather Pump Station

The wet weather pump station (WWPS) operations for the wet weather management are described as follows:

- Four additional pumps, piping and accessories, generator, transformer and related electrical work, and appurtenances are anticipated as part of WWPS upgrades in the Nutrient Management Facility (NMF) building at the AlexRenew WRRF for CSO wet weather control under LTCPU.
- The WWPS will regulate flow levels in the tunnel to prevent reverse flow and backup to the CI through the new HGL Structure. At a preset water level, the pumps will draw down the hydraulic grade line from the tunnel and discharge to the relocated CSO-004 outfall via the connecting new 60-inch effluent sewer. This will provide relief from basement backups in the interceptor system. Based on the sizing of the tunnel it is anticipated that the WWPS will achieve the presumption approach level of control (4-6 overflows per year in the typical year) and together with GI and targeted sewer separation achieve consistency with the Hunting Creek TMDL[7].
- A 60-inch passive gravity relief sewer is anticipated from the shaft (Shaft 3) immediately upstream of WWPS.

[7] The City's preliminary engineering indicates an expectation of having 4 or fewer overflows per year; however the presumption approach criteria allows for 4-6 overflows during the typical year.

8.1.6 New CSO-004 Outfall Structure

A relocated CSO-004 outfall structure is anticipated to be constructed downstream of the 60-inch effluent sewer from the WWPS. It includes a tide gate at the end of the sewer to prevent flow from Hooffs Run backing up the sewer toward the WWPS.

8.1.7 Existing CSO-003 Outfall Structure

The existing CSO-003 outfall structure discharges underneath Duke Street into Hooffs Run. During typical wet weather events, the discharge for CSO-003 will be diverted into the tunnel system and no discharges will occur at the existing structure. However, due to the high elevation of the CSO-003 outfall, there is the potential to cause basement backups during extreme wet weather events; CSO-003 would only be activated during extreme wet weather events. Therefore, the existing CSO-003 outfall structure will remain in place and will need to continue to be permitted under VPDES. Based on preliminary engineering evaluations, it is not anticipated that CSO-003 will overflow during the typical year.

8.2 CSO-002 Storage Facilities

8.2.1 Storage Tank

The CSO-002 Storage tank alternatives anticipate the following operational elements as shown on the conceptual drawings in Attachment B:

- A 3.0 million gallon below-grade storage tank located in-line with the existing CSO-002 outfall sewer (alternative #2 and #3) or off-line of the existing CSO-002 outfall sewer (alternative # 1 and #4).
- An inflow channel will be constructed downstream of the existing bar screens on the CSO-002 outfall sewer to divert wet weather flow to the off-line storage tanks while wet weather flow will be intercepted directly by the on-line tanks.
- The floor of the proposed tank alternatives is sloped toward a sump pit which will house a submersible sump pump. The submersible sump pump is accessible through an access hatch in the top slab of tank, and is used to dewater the tank back into the sewer system via a dewatering forcemain after the wet weather event has passed.
- An overflow channel will be provided from each tank to the CSO-002 outfall to allow overflow discharge when the tank capacity is exceeded during extreme weather events.

Section 9 Program Implementation Plan

The recommended program implementation plan for the LTCPU projects is discussed in this section. This includes the program implementation schedule, program costs and anticipated spending projections, and a brief discussion on funding strategy for the LTCPU projects.

9.1 Recommended Facilities

The LTCPU implementation includes the following recommended facilities which are described in detail in previous sections (Section 6 and Section 7).

- Store and Treat Facilities

  A 1.6 million gallon storage conveyance tunnel to address CSO-003/004 and a 3.0 million gallon storage tank to address CSO-002.

- Green Infrastructure

  Green Infrastructure is incorporated in the LTCPU as a complementary strategy that will be implemented citywide using an adaptive management approach in the next and future permit cycles.

- Targeted Separation

  Separation is part of the LTCPU as a complementary strategy. The LTCPU will incorporate the City's ongoing Area Reduction Plan as a path to further reducing the bacteria load in the remaining CSOs following the implementation of the store and treat infrastructure.

- Other Strategies

  One example of other strategies that could be implemented is real-time controls (RTC). Real-time controls can be used to compliment the infrastructure proposed and to optimize the cost effective design, construction, operation and maintenance of facilities. RTC and other strategies will be fully evaluated as the planning and design progresses. These evaluations may result in revisions to the size and type of infrastructure, but are not expected to result in changes to the number of overflows.

- CSO-001 Strategy

  As part of the LTCPU, a preliminary strategy for CSO-001 to address the overflows was identified:

  – CSO-001 Phase I – Continue sewer separation and implement green infrastructure in the Pendleton sewershed to reduce overflows at CSO-001 over time. Additionally, the City will conduct a feasibility study of additional controls for CSO-001 during the 2018-2023 permit cycle. The feasibility study will take into account existing infrastructure and utilities, permitting issues and environmental issues in order to determine which locations would be most suitable to construct future combined sewer infrastructure.

  – CSO-001 Phase II – Beginning in 2026, assess the level of control following substantial completion of the CSO project for CSO-003 and CSO-004, performance of CSO-001 Phase I, and future regulatory requirements. This assessment will include engineering analyses that will recommend future infrastructure (potentially a store and treat strategy) to address remaining overflows at this outfall. Also, planning level costs, rate impacts and timeline option(s) for implementation will be provided.

9.2 Program Implementation Schedule

9.2.1 Program Assumptions

The following general assumptions are made with regard to the LTCPU program implementation.

- Store and Treat Facilities Construction: It is anticipated that the infrastructure projects would be constructed in phases rather than all at once. Based on the needs of the City and synergies with other sewer projects in the City, and for AlexRenew, the CSO-003/004 tunnel will likely be constructed first and the CSO-002 storage tank will be constructed following substantial completion and a performance evaluation of the CSO-003/004 tunnel.
- Hooffs Run Junction Chamber (HRJC): The HRJC is located at the AlexRenew site. AlexRenew, as part of their current permit, "*shall commence an engineering evaluation of options/alternatives to study the need, feasibility and possible means of minimizing the occurrences of wet weather overflows at the Hooffs Run Junction Chamber. …The final study and any proposed plan and implementation schedule should be compatible with the City of Alexandria's Long Term Control Plan Update…and shall be submitted to DEQ-NRO for review and approval on or before 31 December 2017 or one year from date of DEQ approval of the City's final LTCPU, whichever occurs later*." It is expected that the planning, design, and modification of the HRJC will be coordinated with the proposed LTCPU infrastructure.
- State and Federal Legislation: The LTCPU provides a plan for the City to comply with the Hunting Creek TMDL with large-scale combined sewer infrastructure being constructed by 2035. As such, this plan complies with all current State and Federal regulations and mandates. In the event there is state or federal legislation passed that causes or has the potential to cause the City's LTCPU to be out of compliance with state or federal laws, then the City reserves the right to reopen the LTCPU. This reopening could include a reconsideration of the regulatory approaches to address the Hunting Creek TMDL, along with any future mandates, as presented in the *Regulatory Requirements Technical Memorandum*.

It is possible that there may be changes in the schedule or order of the projects to accommodate changes in conditions. For example, it may be necessary for the CSO-002 storage tank to be constructed before the CSO-003/004 storage tunnel as a result of a change in conditions. If changes in the schedule or order of the projects are necessary, the City will notify VDEQ of such changes and will submit a revised implementation schedule.

9.2.2 Program Elements

The program implementation plan of the LTCPU projects includes the following elements discussed in the next sections.

9.2.2.1 Planning

The LTCPU planning phase includes the development of this plan for CSOs 002,003 and 004 which the City will implement to address the new bacteria waste load allocations for CSO discharges to Hunting

Creek. Although there no VPDES Permit requirement to address CSO-001, the City is also including in the LTCPU a plan for the addressing overflows at CSO-001.

9.2.2.2 VDEQ Review and Approval

The LTCPU will be submitted to VDEQ for review and approval. The design and construction of the CSO-003/004 storage tunnel will proceed in accordance with the approved schedule.

9.2.2.3 Design and Bid Phase

Construction of each CSO control project identified will be preceded by an engineering design. During this period the following activities are anticipated:

- Field Investigations: This includes utility and topographic survey and geotechnical investigation
- Engineering Design: This includes preliminary and final design of the proposed infrastructure
- Bid: The bidding schedule will be determined by whether a design-bid-build, design-build or other procurement and contracts packaging procedures are adopted for the LTCPU implementation. A design-build approach has been used by other municipalities to facilitate having the design-builder on-board early in the process and being responsible for the final design. The various contracting approaches will be considered and a final selection made prior to design.

9.2.2.4 Construction

It is anticipated that construction of CSO-003/004 facilities will proceed following issuance of notice to proceed and receipt of all necessary permits. Construction periods for CSO-003/004 and all projects are indicated in the implementation schedule included in Section 10. The City and AlexRenew continue to work closely together on scheduling, construction, and funding issues.

9.2.2.5 Post Construction Monitoring

Post construction monitoring for CSO controls will be conducted after completion of the construction of each store and treat facility. Results of CSO-003/004 storage tunnel post-construction monitoring will be used to adapt the design of CSO-002 storage tank as needed. The results will form part of the adaptive management approach for green infrastructure implementation.

9.2.2.6 Permitting

A preliminary list of potential permits required for the various CSO control projects is summarized in Table 9-1. It is anticipated that the City will initiate permitting during the preliminary design phase of each project to expedite construction work.

Table 9-1
LTCPU Preliminary Permit Register

Project Component	Permitting Agency	Permit Type	Proposed Impacts	When Required	Description/Notes
CSO-003/004 (All alternatives)	Virginia Marine Resources Commission	VMRC Permit	Crossing under Hooffs Run	Prior to construction	VMRC regulates any crossing over, under or through a waterbody under their jurisdiction.
CSO-003/004 (Drop shaft #2)	Virginia Dept. of Environmental Quality	General Permit	Necessary only if jurisdictional waters of the US will be his disturbed by Drop shaft #2 construction activities.	Prior to construction	If Drop shaft #2 does not disturb any jurisdictional areas, no permit will be required from DEQ (or COE) for the CSO component of the project.
CSO-003/004 (Drop shaft #2)	U.S. Army Corps of Engineers	Nationwide Permit	Necessary only if jurisdictional waters of the US will be disturbed by Drop shaft #2 construction activities.	Prior to construction	To qualify for NWP #12, impact must be < 1/2 acre; otherwise a State Program General Permit (12-SPGP-01) can be requested.
CSO-002 Tank Alternatives #1, #2, and #4	N/A	N/A	N/A	N/A	These locations appear to be under existing impervious areas. Provided no jurisdictional areas will be disturbed, no permits will be required from VMRC, DEQ or COE.
CSO-002 Tank Alternative #3	Virginia Marine Resources Commission	VMRC Permit	Fill within Hunting Creek Embayment	Prior to construction	VMRC regulates the bed of the embayment.

Project Component	Permitting Agency	Permit Type	Proposed Impacts	When Required	Description/Notes
CSO-002 Tank Alternative #3	Virginia Dept. of Environmental Quality	General Permit	Fill within Hunting Creek Embayment	Prior to construction	DEQ may waive and allow VMRC to take the lead for state authorization.
CSO-002 Tank Alternative #3	U.S. Army Corps of Engineers	Individual Permit*	Fill within Hunting Creek Embayment	Prior to construction	Given the size/scope of the new structure, it does not appear this can be authorized by a NWP.
CSO-002 Tank Alternatives #2, #3, and #4	National Park Service	NEPA Compliance	NPS Land Disturbance	Prior to construction	Coordination with NPS regarding NEPA compliance will be required for work on NPS property.
* A COE IP for Tank Alternative 3 would also provide authorization under Section 10 of the Rivers and Harbors Act					

9.2.2.7 Easements and Land Acquisition

A preliminary list of potential easements and land acquisitions required for the various CSO control projects is summarized in Table 9-2.

Table 9-2
LTCPU Potential Easements and Land Acquisition Needs

Project Component	Location	Owner	Easement or Land Acquisition	When Required
CSO-003/004 (Drop Shaft #1, All alternatives)	1501 Duke Street	Private Owner (CBP8 GP)	Easement and/or Land Acquisition	Prior to construction
CSO-002 Tank (Alternative #1)	1204 S Washington Street (Bridgeyard Apartments)	Private Owner (Laramar Group)	Easement and/or Land Acquisition	Prior to construction
CSO-002 Tank (Alternative #4)	Jones Point Park	National Park Service	Easement	Prior to construction

9.2.2.8 Public Outreach

A robust public outreach program was developed and implemented during the development of the LTCPU. It is anticipated that public outreach efforts will continue during design, construction, and post construction monitoring of the projects.

9.2.3 Implementation Schedule

An implementation schedule for the recommended projects included in the LTCPU is provided in Figure 9-1. The schedule assumes approval of the LTCPU by VDEQ no later than January 1, 2017 and approval of AlexRenew's HRJC plan by VDEQ no later July 1, 2018. If approval of either of these plans is delayed, then the LTCPU implementation schedule will be shifted accordingly, subject to the approval of VDEQ.

The schedule shown in Figure 9-1 allows for adequate time to design and construct the CSO-003/004 infrastructure following the approval of AlexRenew's HRJC plan. There is a 4-year time period shown from the end of construction of the CSO-003/004 infrastructure until the beginning of the CSO-002 infrastructure construction. This time period is needed in order to evaluate the effectiveness of the CSO-003/004 infrastructure, perform an adaptive management review, and develop the design for the CSO-002 infrastructure. These large infrastructure projects are being constructed in a densely populated, highly developed, historic and complex area in and around the Old Town area of Alexandria. Furthermore, there are many stakeholders impacted by these projects, including, but not limited to, AlexRenew, Fairfax County, the National Park Service, local residents and businesses. It will take a significant amount of time and effort to appropriately plan for the complex technical requirements, as well as stakeholder engagement, during the planning and design of these projects. Practical guidance on implementing these complex projects based on other CSO programs was solicited from the Technical Review Panel (Section 2.1.4) and incorporated into the schedule.

The proposed schedule also allows for a structured sewer rate increase to be spread out over time. Compressing the schedule would require increasing the sewer rates to users a significant amount in a short amount of time.

As shown on the schedule there is some overlap of tasks between the implementation of the CSO-003/004 infrastructure and the CSO-002 infrastructure. The overlap primarily occurs during the post-construction monitoring of the CSO-003/004 infrastructure and the adaptive management review and design of the CSO-002 infrastructure. The adaptive management review will be used to evaluate the construction and performance of the CSO-003/004 infrastructure. This review will be used to incorporate changes to the CSO-002 infrastructure to provide a more optimized design and avoid any issues that arose during the CSO-003/004 infrastructure design and construction. The adaptive management review will help optimize the design and construction of the CSO-002 infrastructure.

Figure 9-1
Implementation Schedule

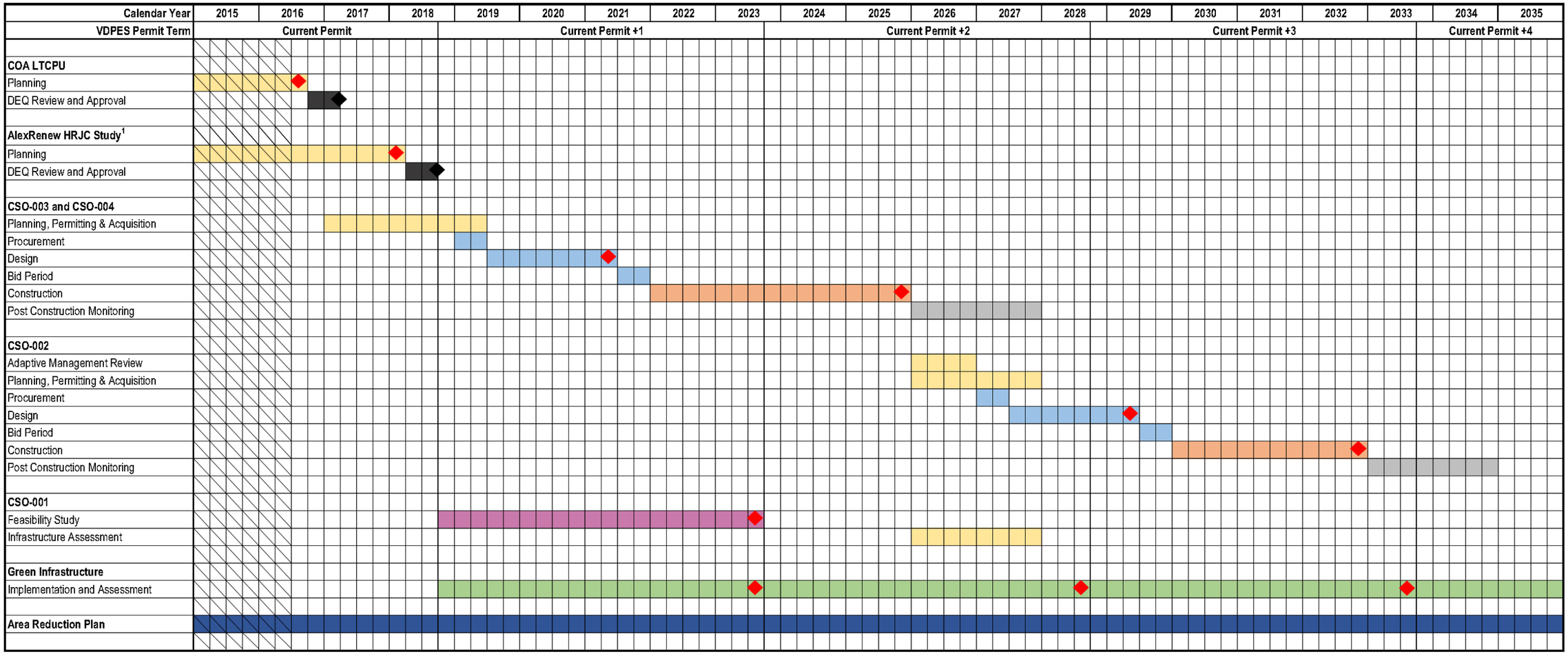

Footnotes:
1. It is anticipated that the planning, design, and modification of the HRJC by AlexRenew will be coordinated with the proposed LTCPU infrastructure.

Legend
- Regulatory Approval
- Potential Permit Milestone
- Planning Activity
- Regulatory Review
- Design Activity
- Construction Activity
- Post Construction Monitoring
- CSO-001 Feasibility Study
- Green Infrastructure
- Targeted Sewer Separation Projects

9.3 Program Costs and Spending Projections

A summary of the capital costs for the Long Term Control Plan Update is included in Table 9-3. All costs presented are in 2015 dollars.

Table 9-3
Preliminary Capital Costs (2015 Dollars)

	Capital Costs ($)	Capital Costs +50% ($)
CSO-003/004 Storage Tunnel and Facilities	$79,800,000	$119,700,000
CSO-002 Storage Tank and Facilities	$35,410,000	$53,115,000
Green Infrastructure	$5,000,000	$7,500,000
Targeted Sewer Separation	$5,000,000	$7,500,000
Total Costs	**$125,210,000**	**$187,815,000**

9.4 Program Funding Strategy

The LTCPU projects will be funded through the issuance of bonds which are paid back through the sanitary sewer rates. Currently, the average household in Alexandria pays $45-50 per month on their sewer bill. As part of the planned update to the Sanitary Sewer Master Plan, which will be completed in 2018, the City anticipates determining the specific impact of these projects on the sewer rates, but preliminary estimates indicate that the expected impact will be an increase of $10-15 per month on the monthly sewer bill for these projects. These increases to the billing will be implemented over time and will be based on the spending projections discussed in the previous sections.

Section 10 Post Construction Monitoring Plan

10.1 Post Construction Monitoring

The LTCPU implementation will include post construction monitoring for the proposed infrastructure. The monitoring data will be used to assess the effectiveness of projects in meeting program performance measures. The goal of the post construction monitoring for the proposed infrastructure will be to demonstrate that the CSOs will be reduced to the levels predicted and meets the program goals based on the USEPA Presumption Approach criterion of no more than 4-6 overflows per year in the typical year established for the CSO controls. Attainment of the goals will be assessed through flow monitoring and modeling.

It must be noted that the bacteria TMDL water quality goals in the receiving waters will not be achieved unless controls for the other sources (including stormwater, septic, and wildlife) contributing to the bacteria load are implemented in addition to the CSO controls.

10.2 Flow Monitoring Plan

Compliance of the plan will be assessed against the EPA CSO Policy Presumption Approach. Flow monitoring will be conducted over a 2-year period and used to calibrate the City's combined sewer system model. This model will be used to compare actual performance against the typical year for compliance with the presumption approach. Post-construction flow monitoring will be conducted at CSO-002, CSO-003 and relocated CSO-004 outfalls to monitor CSO overflows.

Appendix A

List of Meetings

#	Date	Presentation Title	Audience
1	8/5/2013	Proposed Combined Sewer System Permit	Public Meeting (through EPC)
2	10/30/2013	Combined Sewer System Permit and Long-Term Control Plan Update	Federation of Civic Associations
3	11/13/2013	Combined Sewer System Permit and Long-Term Control Plan Update	Old Town Civic Association
4	11/14/2013	Combined Sewer System Permit and Long-Term Control Plan Update	West Old Town Citizens Association
5	1/28/2014	Joint Work Session with Alexandria Renew Enterprises – Sanitary Sewer and CSO Issues	City Council Work Session
6	5/19/2014	Combined Sewer System and Long Term Control Plan Update (LTCP-U)	Environmental Policy Commission
7	9/18/2014	Combined Sewer System Permit and Long-Term Control Plan Update	Porto Vecchio
8	10/21/2014	Combined Sewer System Permit and Long-Term Control Plan Update	AlexRenew Board
9	10/27/2014	Combined Sewer System Permit and Long-Term Control Plan Update	Agenda Alexandria
10	1/27/2015	Combined Sewer System Long-Term Control Plan Update	City Council Legislative Session
11	1/28/2015	Combined Sewer System Permit and Long-Term Control Plan Update	Federation of Civic Associations
12	2/2/2015	Combined Sewer System Permit and Long-Term Control Plan Update	Environmental Policy Commission
13	2/5/2015	Combined Sewer System Permit and Long-Term Control Plan Update	LTCPU Phase I Public Meeting
14	2/11/2015	Combined Sewer System Permit and Long-Term Control Plan Update	Old Town Civic Association
15	3/18/2015	Combined Sewer System Permit and Long-Term Control Plan Update	NorthEast Citizens' Association
16	5/18/2015	Combined Sewer System Long Term Control Plan Update	Environmental Policy Commission
17	5/19/2015	Combined Sewer System Long Term Control Plan Update	Waterfront Commission
18	5/26/2015	Combined Sewer System Long Term Control Plan Update	City Council Work Session
19	6/11/2015	Combined Sewer System Long Term Control Plan Update	West Old Town Citizens Association
20	6/18/2015	Combined Sewer System Long Term Control Plan Update	LTCPU Phase II Public Meeting
21	10/7/2015	CSS Stakeholder Group Meeting #1	CSS Stakeholder Group
22	11/2/2015	CSS Stakeholder Group Meeting #2	CSS Stakeholder Group
23	1/7/2016	CSS Stakeholder Group Meeting #3	CSS Stakeholder Group
24	2/4/2016	CSS Stakeholder Group Meeting #4	CSS Stakeholder Group
25	3/3/2016	CSS Stakeholder Group Meeting #5	CSS Stakeholder Group
26	3/8/2016	Combined Sewer System Long Term Control Plan Update	City Council Work Session

#	Date	Presentation Title	Audience
27	4/6/2016	Combined Sewer System Permit and Long Term Control Plan Update	Virginia Society of Professional Engineers
28	4/7/2016	CSS Stakeholder Group Meeting #6	CSS Stakeholder Group
29	4/13/2016	Combined Sewer System Permit and Long Term Control Plan Update	Old Town Civic Association
30	4/21/2016	Combined Sewer System Long Term Control Plan Update	LTCPU Phase III Public Meeting
31	5/10/2016	Combined Sewer System and the Long Term Control Plan Update	City Council Work Session
32	5/14/2016	Combined Sewer System and the Long Term Control Plan Update	City Council Public Hearing

Appendix B

CSO-003/004 Storage Tunnel Conceptual Plans

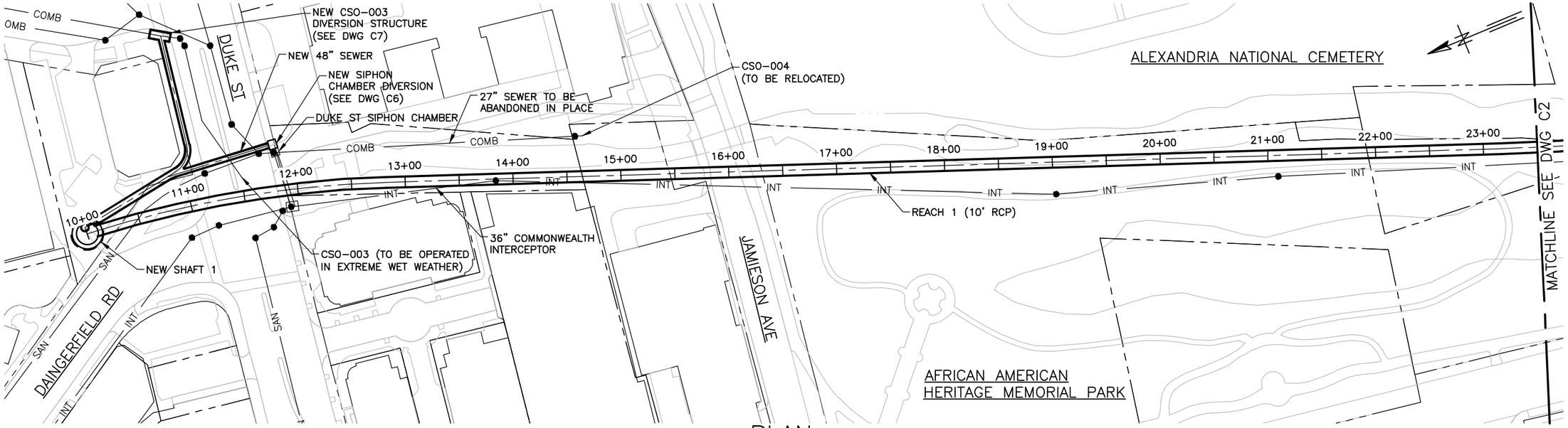

PLAN

SCALE: 1" = 100'

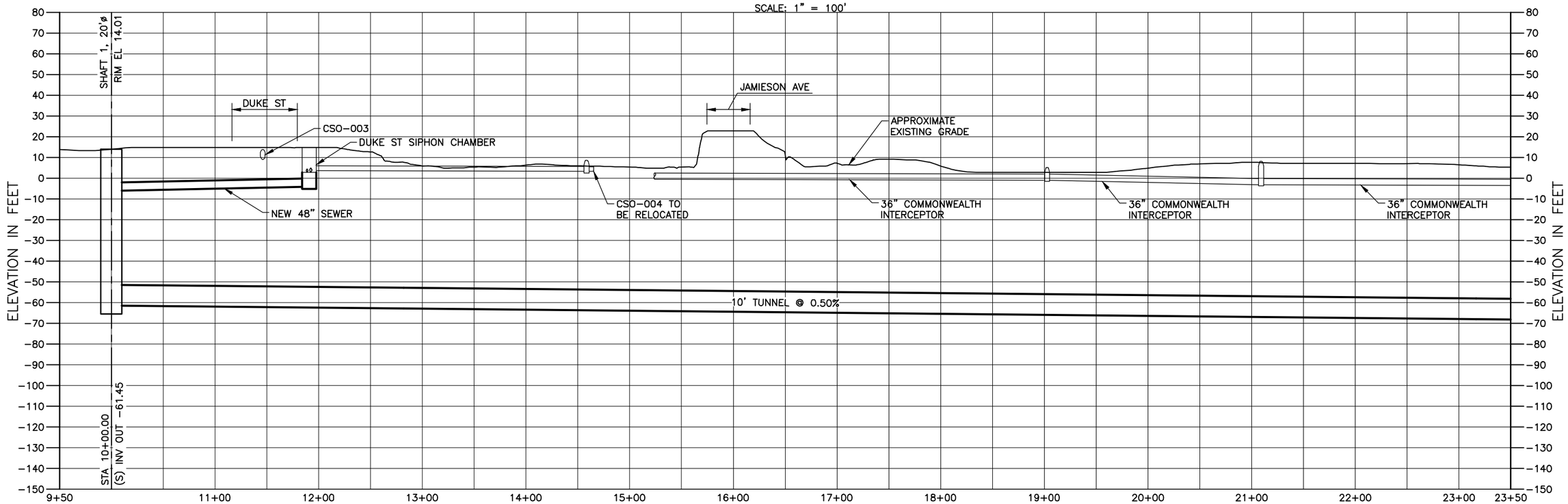

STATION

PROFILE

SCALE: 1" = 100' HORIZONTAL
1" = 50' VERTICAL

GREELEY AND HANSEN
5301 SHAWNEE ROAD, SUITE 400
ALEXANDRIA, VA 22312

0 50 100 FT 1"=100'
0 50 FT 1"=50'

CITY OF ALEXANDRIA
LTCP UPDATE
MAY 2016

TUNNEL CONFIGURATION

DRAWING: C1

X:\0057E-CSS\TO E15-07\21 CADD\21.05 WORKING DWGS\0057E.02-C01.DWG 05/06/2016 1:43:03 PM

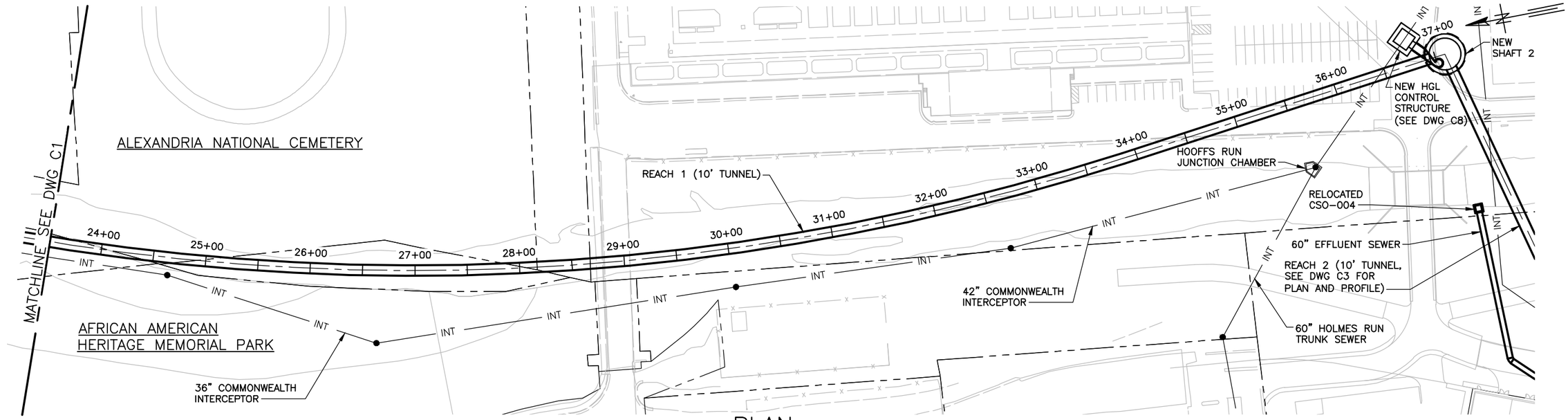

PLAN

SCALE: 1" = 100'

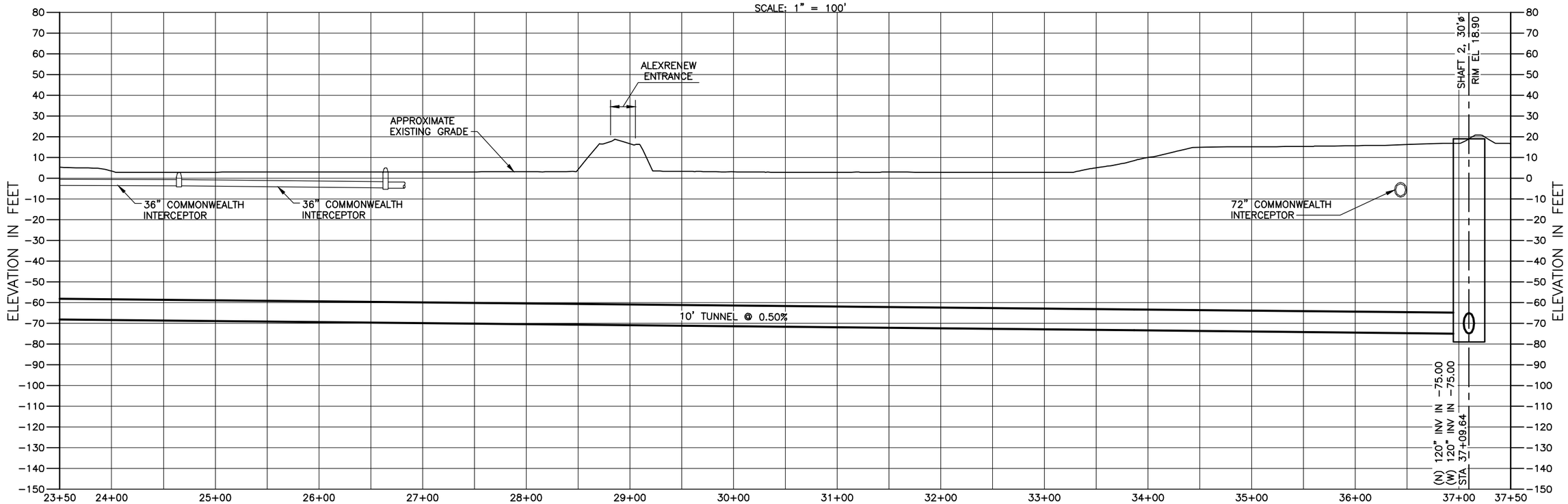

PROFILE

SCALE: 1" = 100' HORIZONTAL
1" = 50' VERTICAL

GREELEY AND HANSEN
5301 SHAWNEE ROAD, SUITE 400
ALEXANDRIA, VA 22312

0 50 100 FT 1"=100'
0 50 FT 1"=50'

CITY OF ALEXANDRIA
LTCP UPDATE
MAY 2016

TUNNEL CONFIGURATION

DRAWING: C2

X:\0057E-CSS\TO E15-07\21 CADD\21.05 WORKING DWGS\0057E.02-C02.DWG 05/06/2016 2:36:49 PM

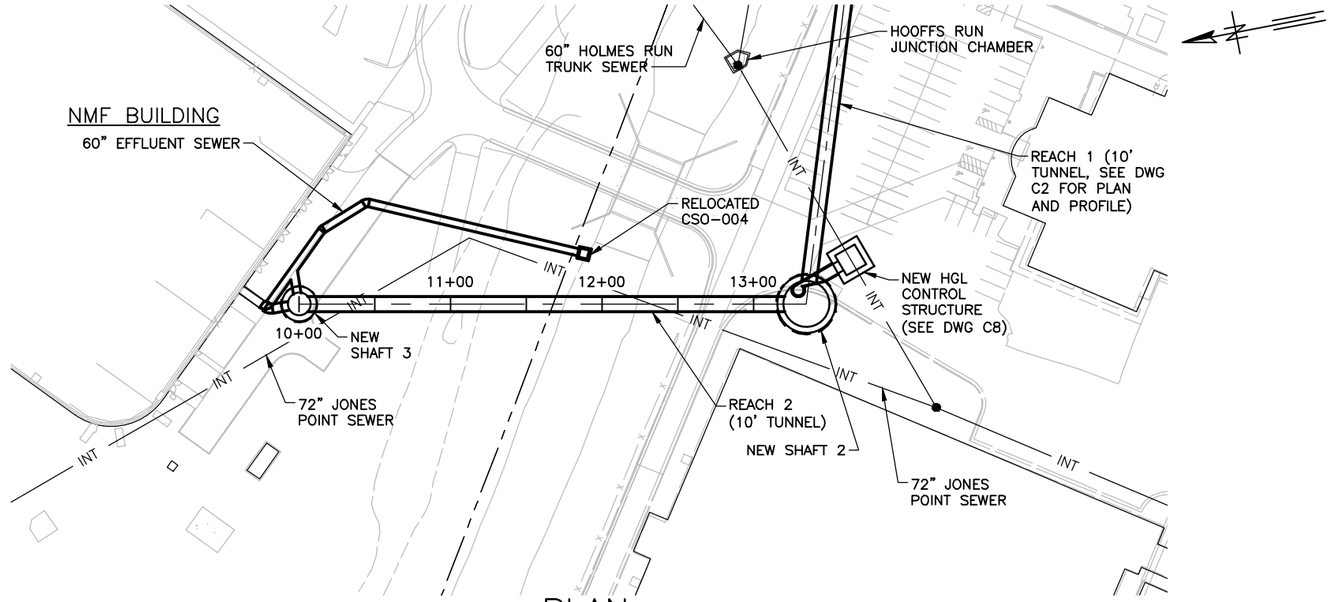

PLAN

SCALE: 1" = 100'

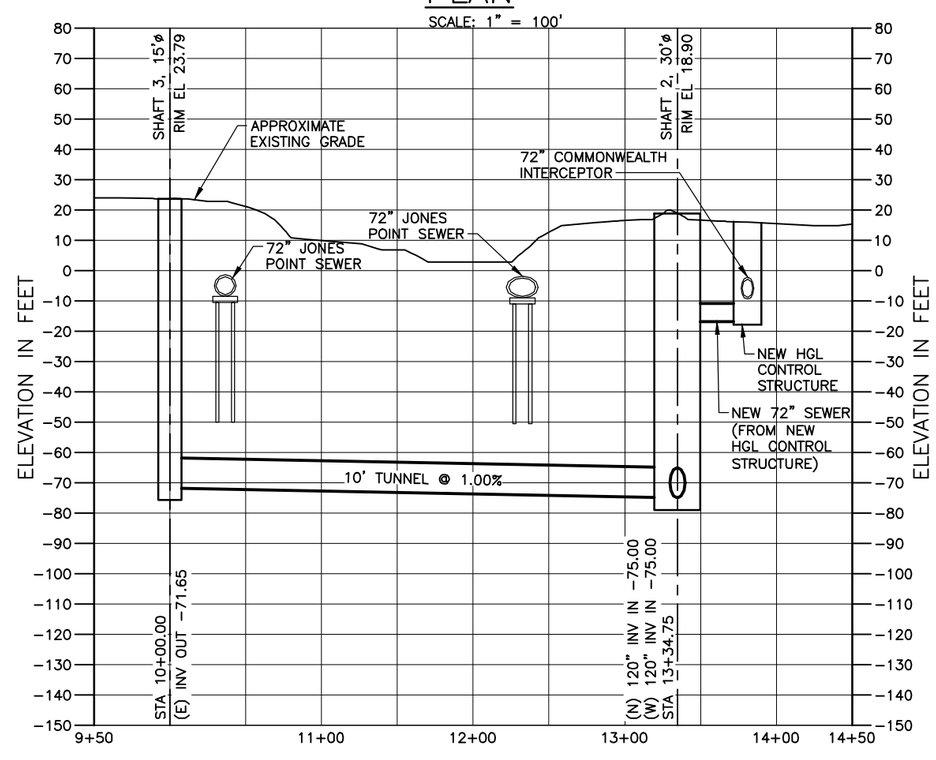

PROFILE

SCALE: 1" = 100' HORIZONTAL
1" = 50' VERTICAL

NOTES:

1. FOR PLANT UTILITIES SEE DRAWING C5.

GREELEY AND HANSEN
5301 SHAWNEE ROAD, SUITE 400
ALEXANDRIA, VA 22312

0 50 100 FT 1"=100'
0 50 FT 1"=50'

CITY OF ALEXANDRIA
LTCP UPDATE
MAY 2016

TUNNEL CONFIGURATION

DRAWING: C3

X:\0057E-CSS\TO E15-07\21 CADD\21.05 WORKING DWGS\0057E.02-C03.DWG 05/06/2016 2:31:26 PM

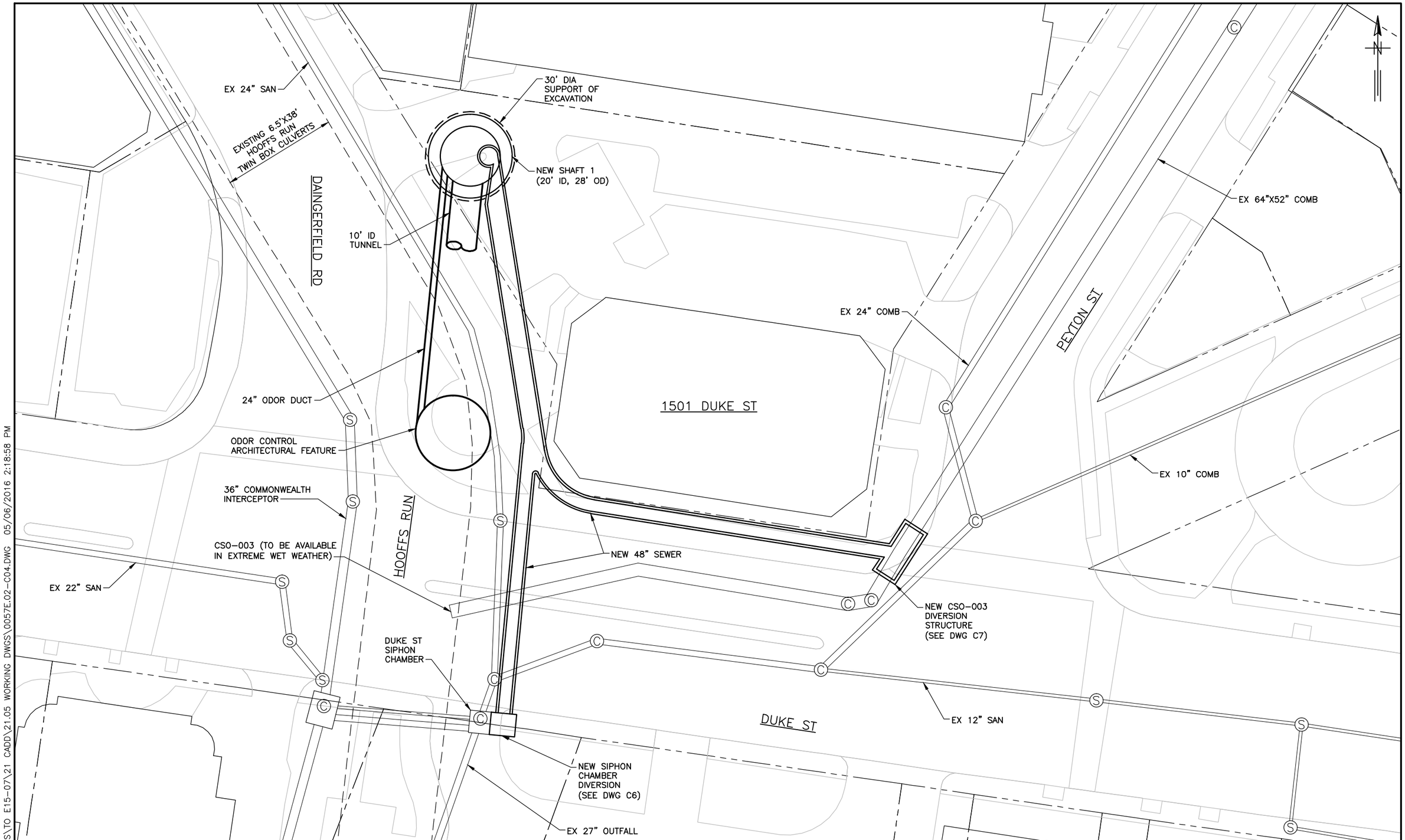

X:\0057E-CSS\TO E15-07\21 CADD\21.05 WORKING DWGS\0057E.02-C04.DWG 05/06/2016 2:18:58 PM

GREELEY AND HANSEN
5301 SHAWNEE ROAD, SUITE 400
ALEXANDRIA, VA 22312

0 30 FT
1"=30'

PLAN

SCALE: 1" = 30'

CITY OF ALEXANDRIA
LTCP UPDATE

MAY 2016

DROPSHAFT SITE EVALUATION

DRAWING: C4

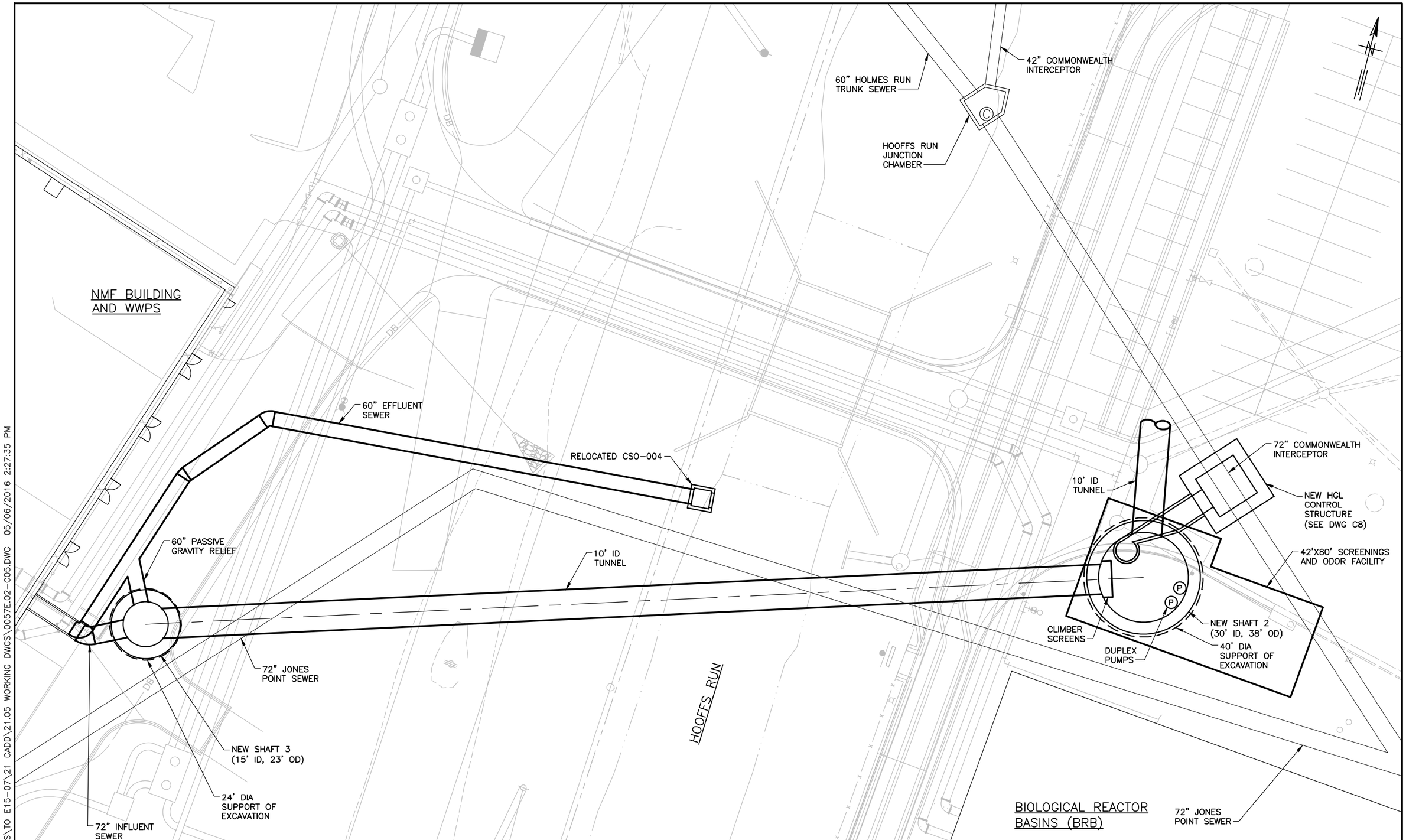

X:\0057E-CSS\TO E15-07\21 CADD\21.05 WORKING DWGS\0057E.02-C05.DWG 05/06/2016 2:27:35 PM

GREELEY AND HANSEN
5301 SHAWNEE ROAD, SUITE 400
ALEXANDRIA, VA 22312

0 30 FT
1"=30'

PLAN

SCALE: 1" = 30'

CITY OF ALEXANDRIA
LTCP UPDATE

MAY 2016

DROPSHAFT SITE EVALUATION

DRAWING: C5

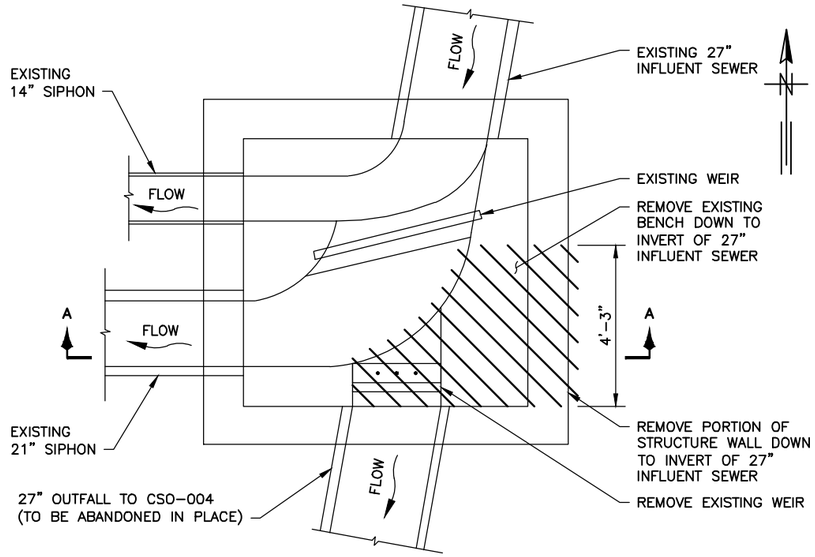

DEMOLITION PLAN

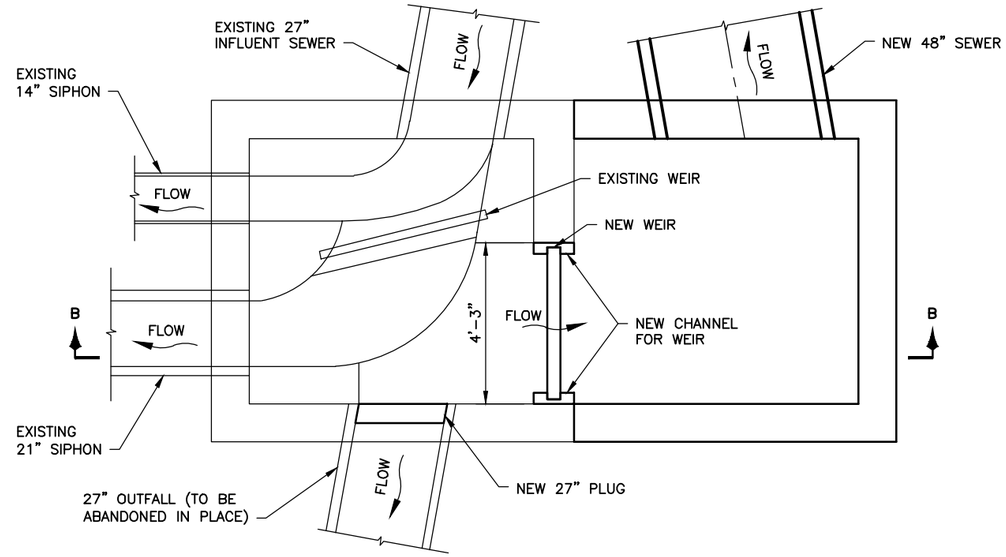

MODIFICATION PLAN

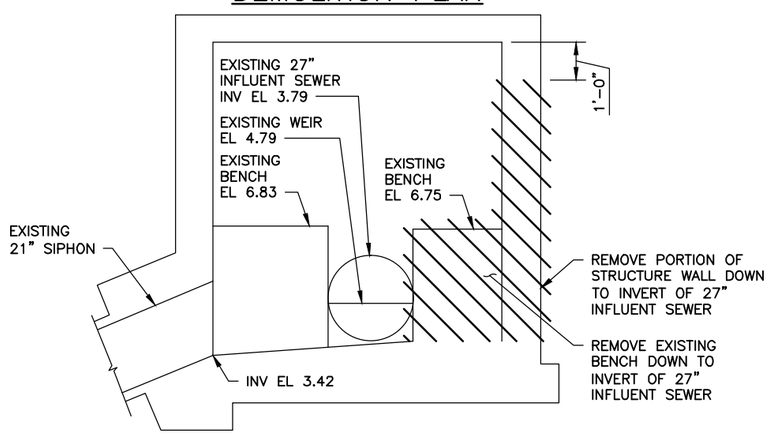

SECTION A – DEMOLITION

DETAIL 1/C6
DUKE ST SIPHON CHAMBER
SCALE: 1/4" = 1'-0"

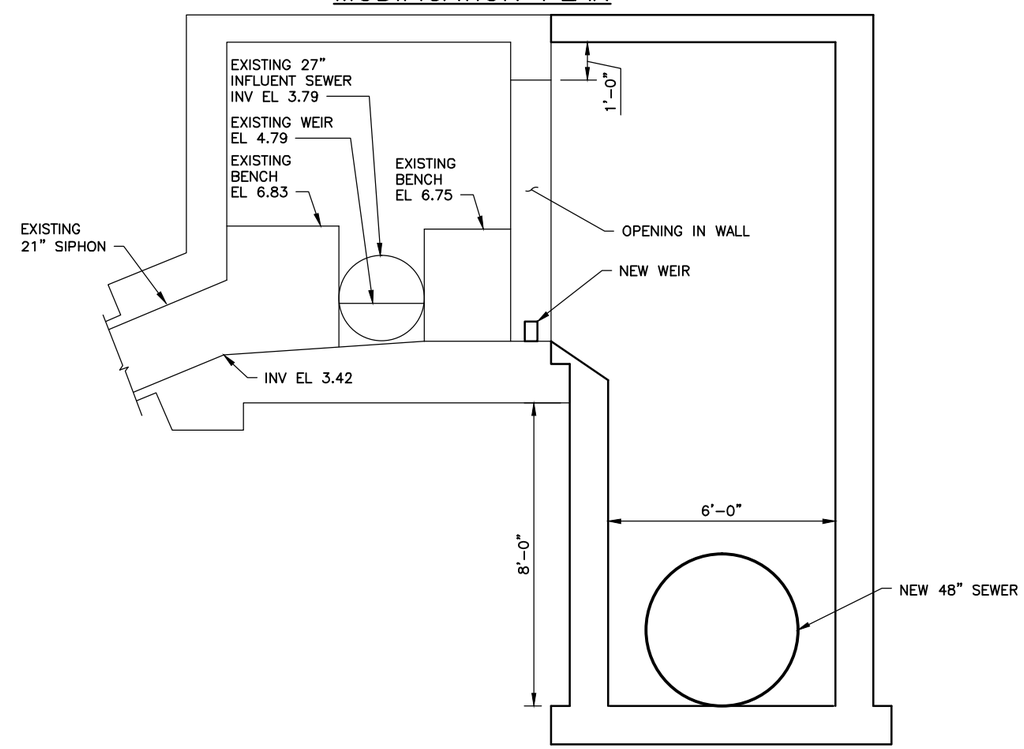

SECTION B – MODIFICATION

DETAIL 2/C6
DUKE ST SIPHON CHAMBER
SCALE: 1/4" = 1'-0"

GREELEY AND HANSEN
5301 SHAWNEE ROAD, SUITE 400
ALEXANDRIA, VA 22312

CITY OF ALEXANDRIA
LTCP UPDATE
MAY 2016

TUNNEL CONFIGURATION DETAILS

DRAWING: C6

X:\0057E-CSS\TO E15-07\21 CADD\21.05 WORKING DWGS\0057E.02-C06.DWG 05/06/2016 12:28:11 PM

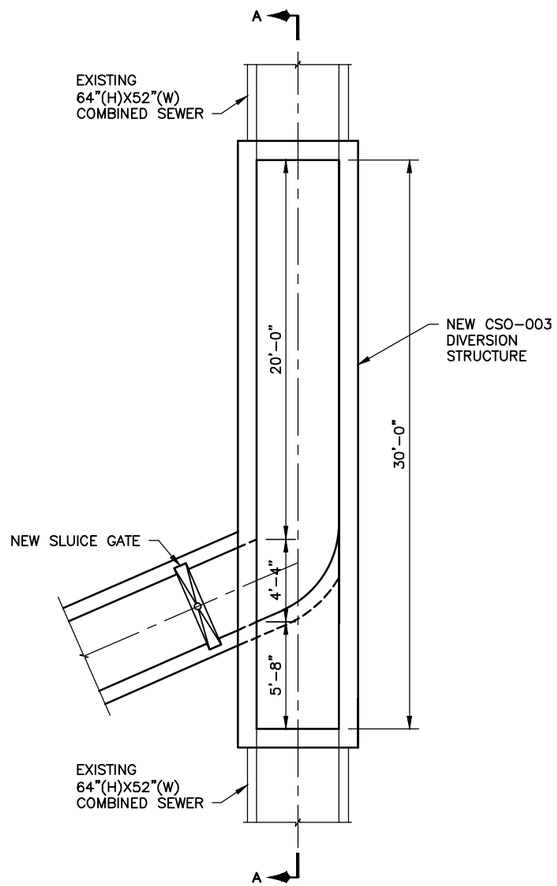

PLAN

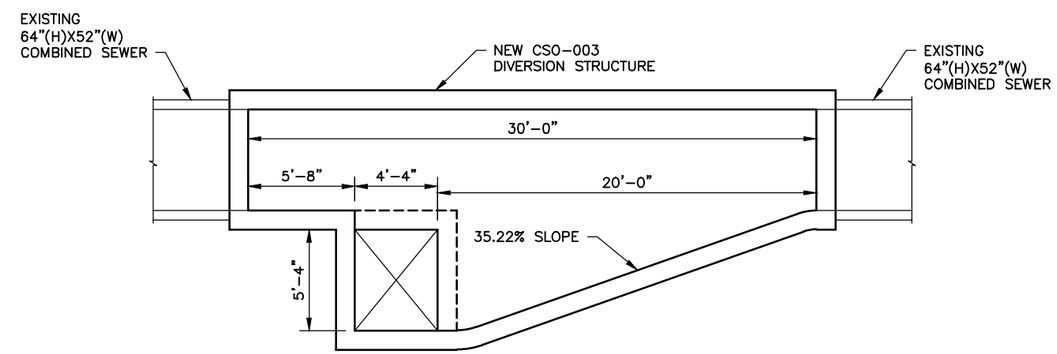

SECTION A

DETAIL 1/C7
CSO-003 DIVERSION STRUCTURE

NOT TO SCALE

GREELEY AND HANSEN
5301 SHAWNEE ROAD, SUITE 400
ALEXANDRIA, VA 22312

CITY OF ALEXANDRIA
LTCP UPDATE
MAY 2016

TUNNEL CONFIGURATION DETAILS

DRAWING: C7

X:\0057E-CSS\TO E15-07\21 CADD\21.05 WORKING DWGS\0057E.02-C07.DWG 05/06/2016 12:32:02 PM

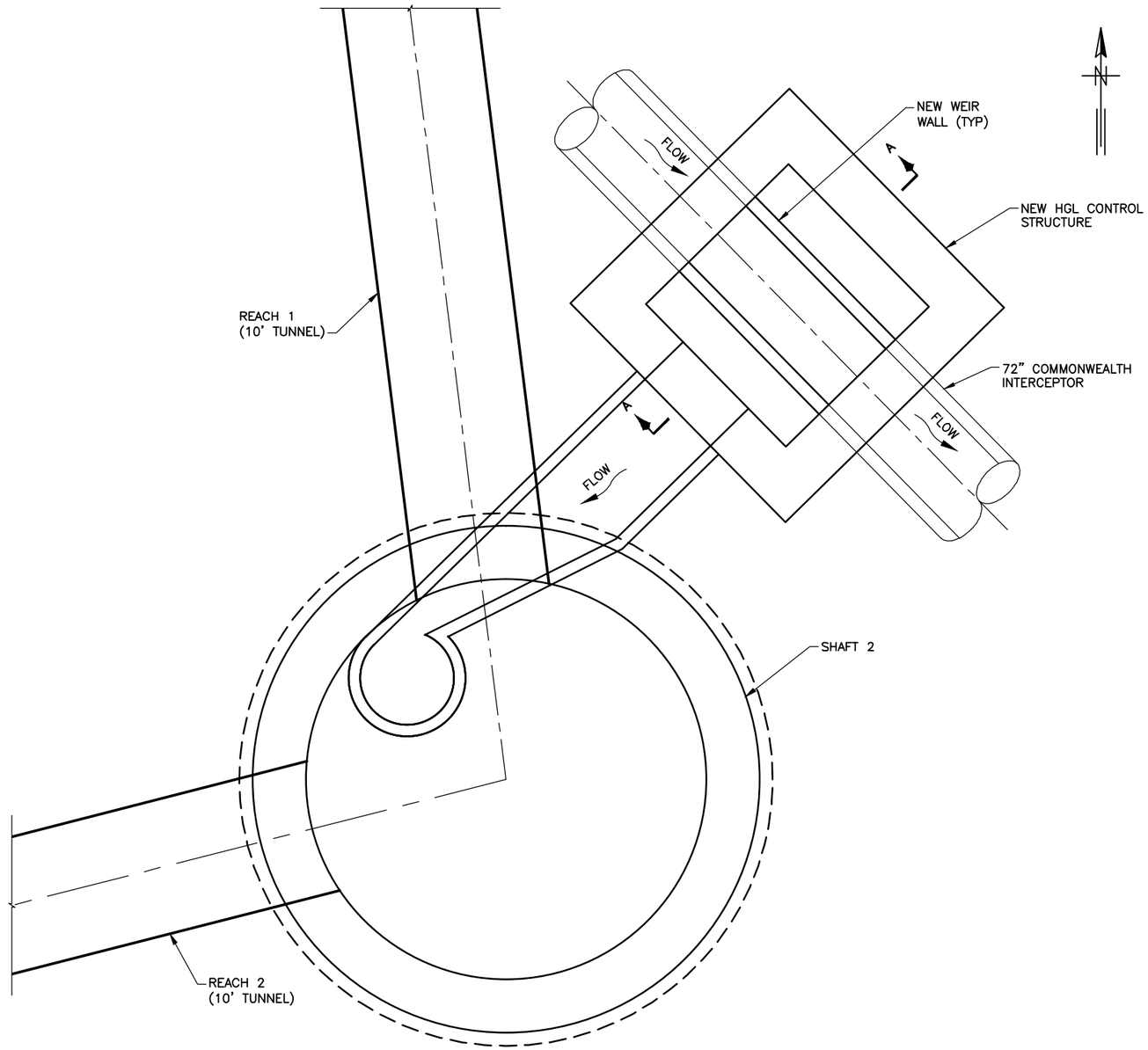

PLAN

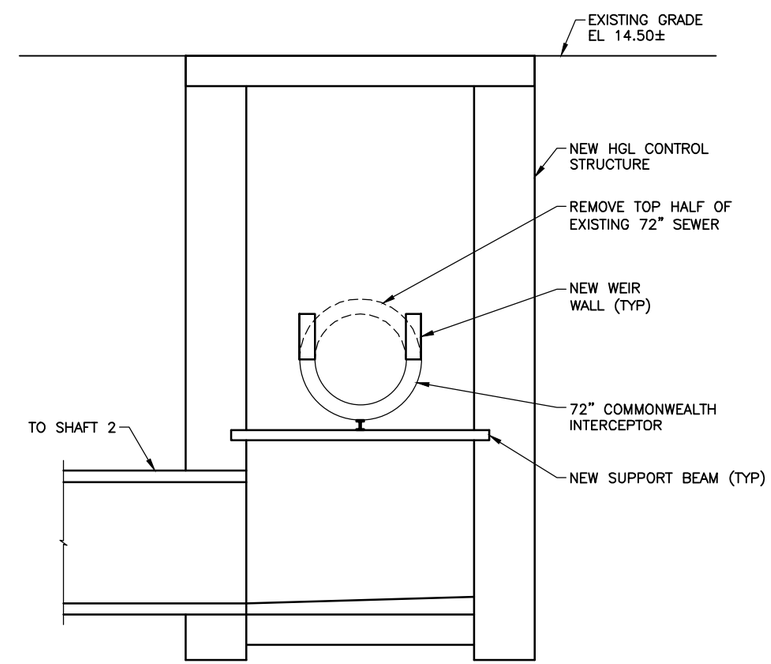

SECTION A

GREELEY AND HANSEN
5301 SHAWNEE ROAD, SUITE 400
ALEXANDRIA, VA 22312

0 5 10 FT
1"=10'

DETAIL 1/C8
NEW HGL CONTROL STRUCTURE

SCALE: 1" = 10'

CITY OF ALEXANDRIA
LTCP UPDATE

MAY 2016

TUNNEL CONFIGURATION DETAILS

DRAWING: C8

X:\0057E-CSS\TO E15-07\21 CADD\21.05 WORKING DWGS\0057E.02-C08.DWG 05/06/2016 12:41:52 PM

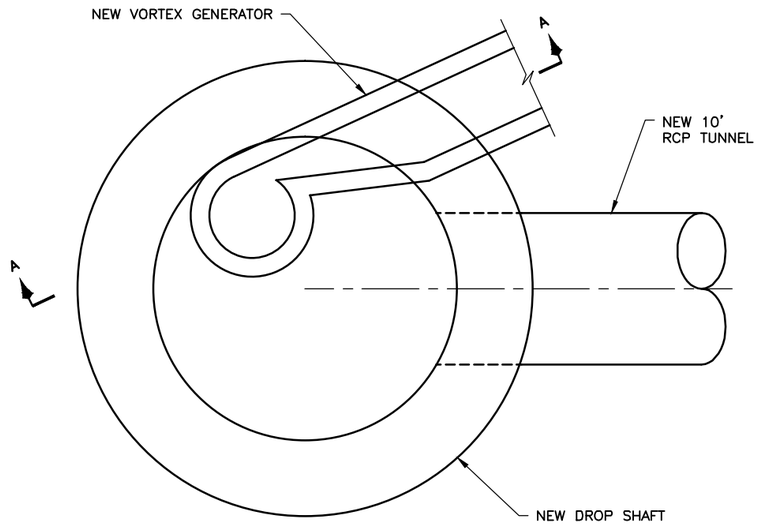

PLAN

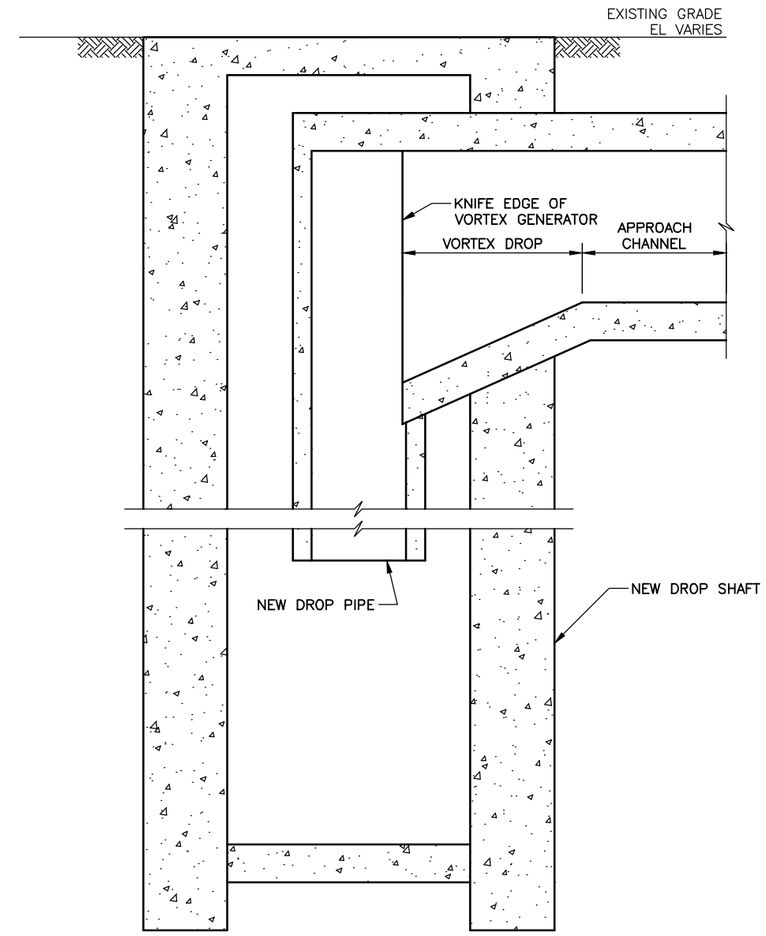

SECTION A

DETAIL 1/C9
TYPICAL DROP SHAFT AND
VORTEX GENERATOR
NOT TO SCALE

GREELEY AND HANSEN
5301 SHAWNEE ROAD, SUITE 400
ALEXANDRIA, VA 22312

CITY OF ALEXANDRIA
LTCP UPDATE
MAY 2016

TUNNEL CONFIGURATION DETAILS

DRAWING: C9

X:\0057E-CSS\TO E15-07\21 CADD\21.05 WORKING DWGS\0057E.02-C09.DWG 05/06/2016 12:46:35 PM

Appendix C

CSO-002 Storage Tanks Conceptual Plans

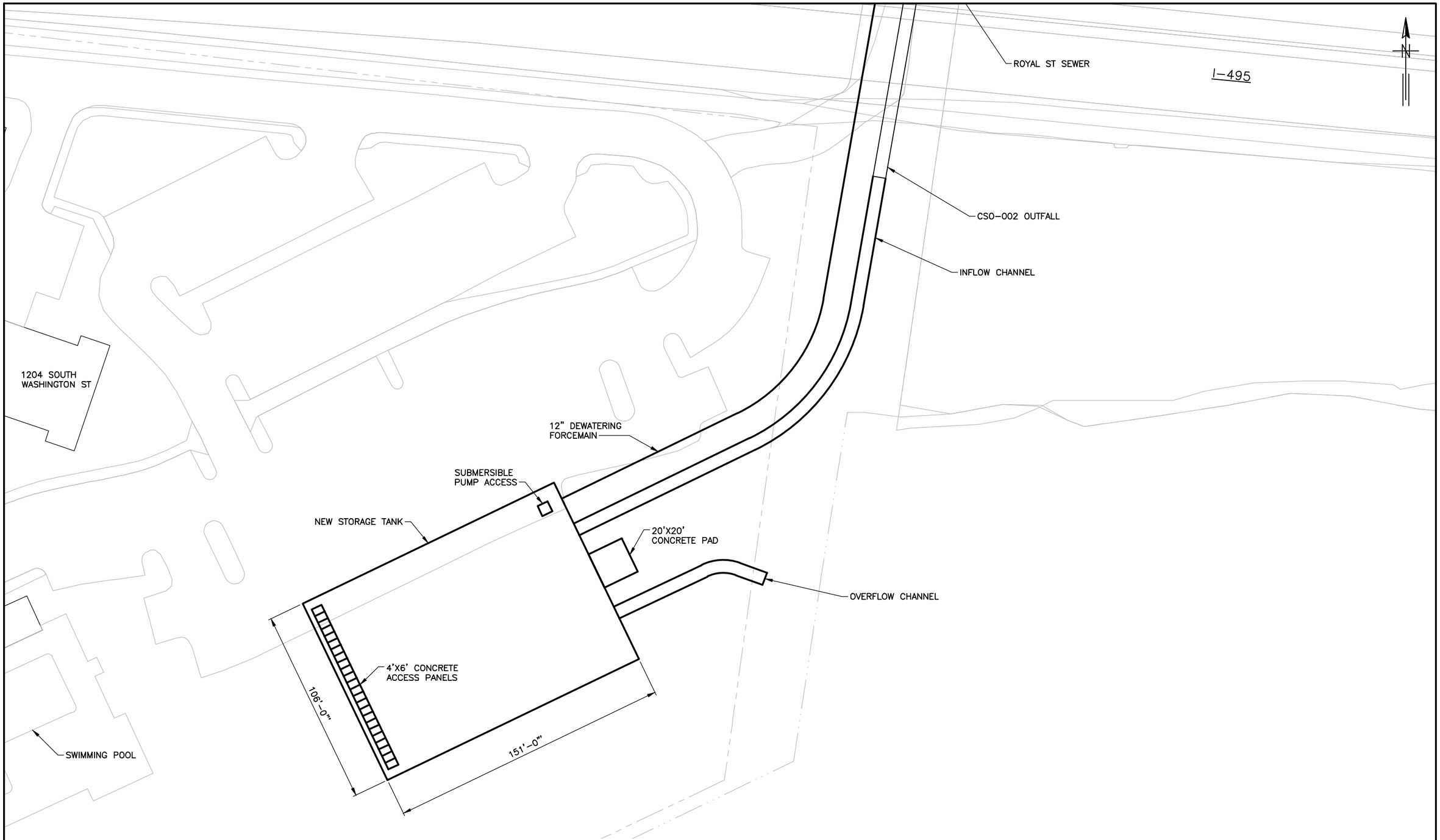

ALTERNATIVE 1

GREELEY AND HANSEN

CITY OF ALEXANDRIA
CSO-002 STORAGE ALTERNATIVES
NOVEMBER 2015

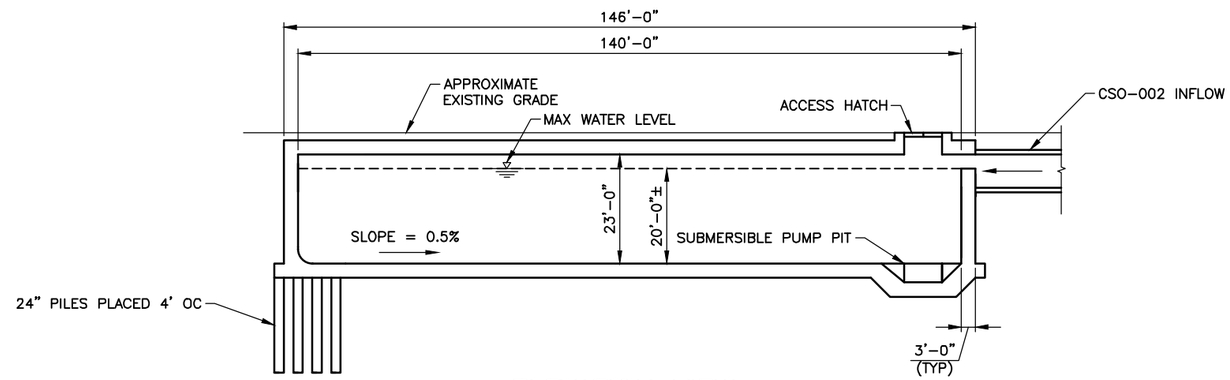

ELEVATION VIEW

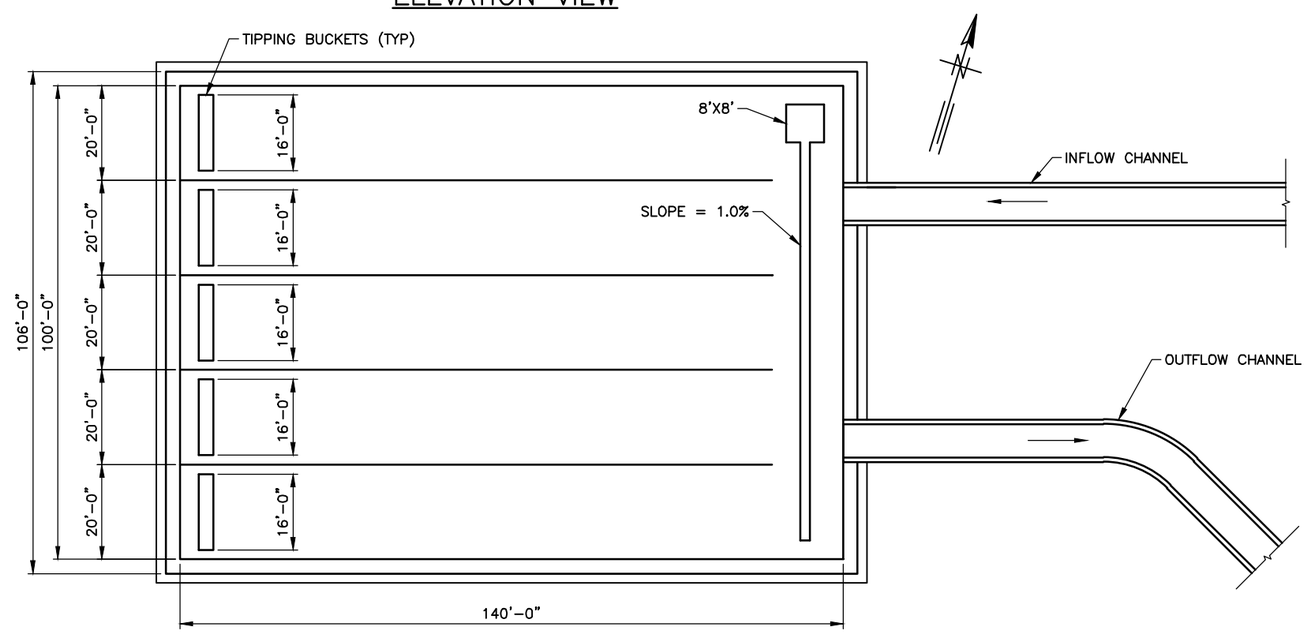

PLAN VIEW

32 0 32 FT
1/32"=1'-0"

ALTERNATIVE 1

GREELEY AND HANSEN

CITY OF ALEXANDRIA
CSO-002 STORAGE ALTERNATIVES
NOVEMBER 2015

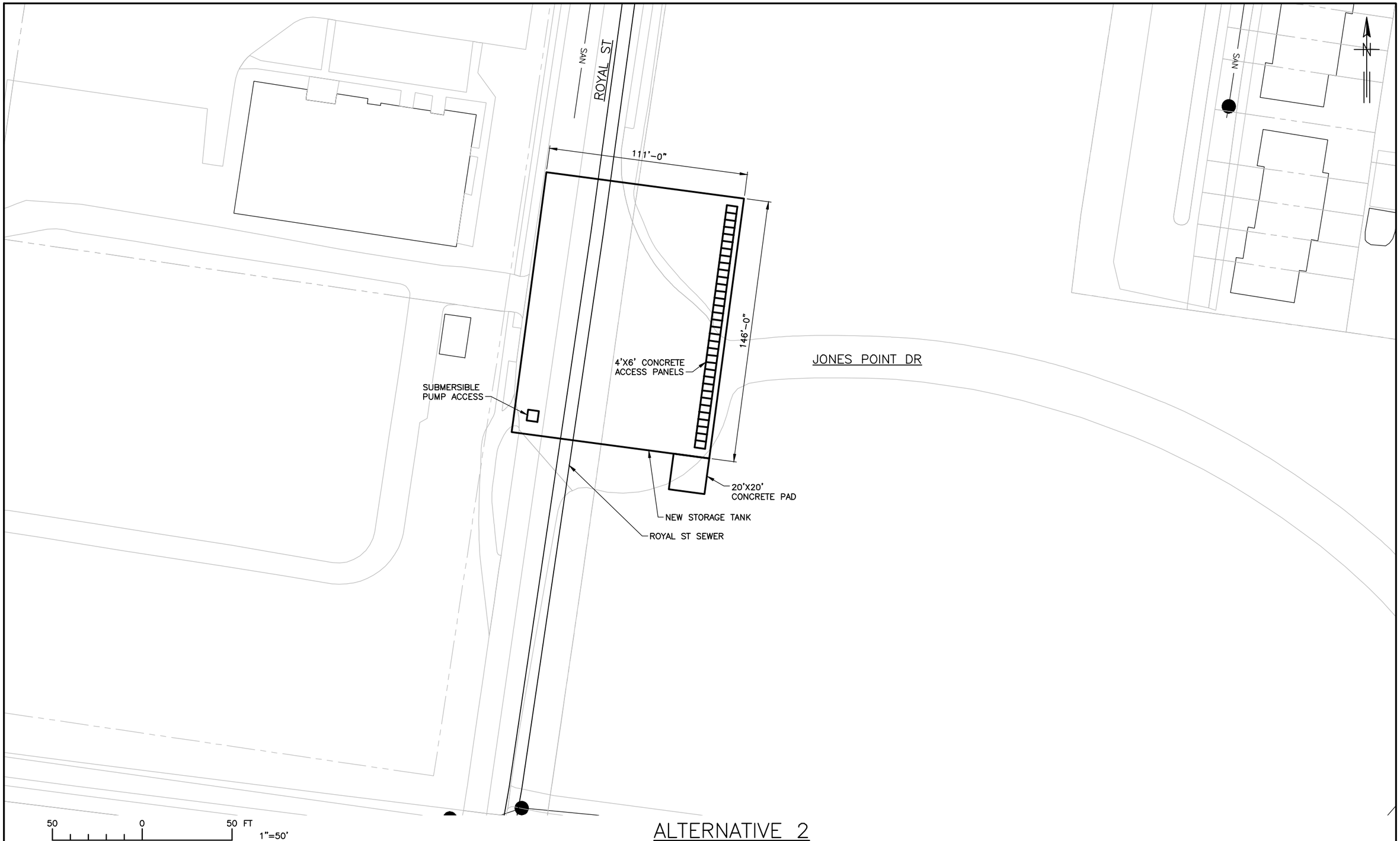

ALTERNATIVE 2

GREELEY AND HANSEN

CITY OF ALEXANDRIA
CSO-002 STORAGE ALTERNATIVES
NOVEMBER 2015

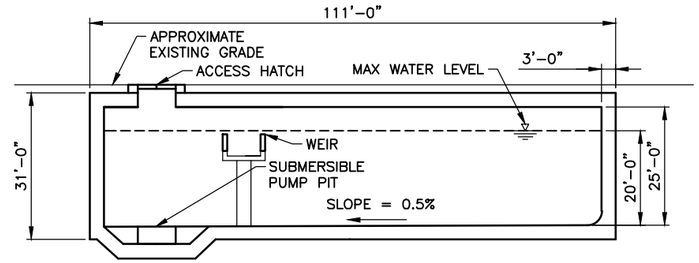

ELEVATION VIEW

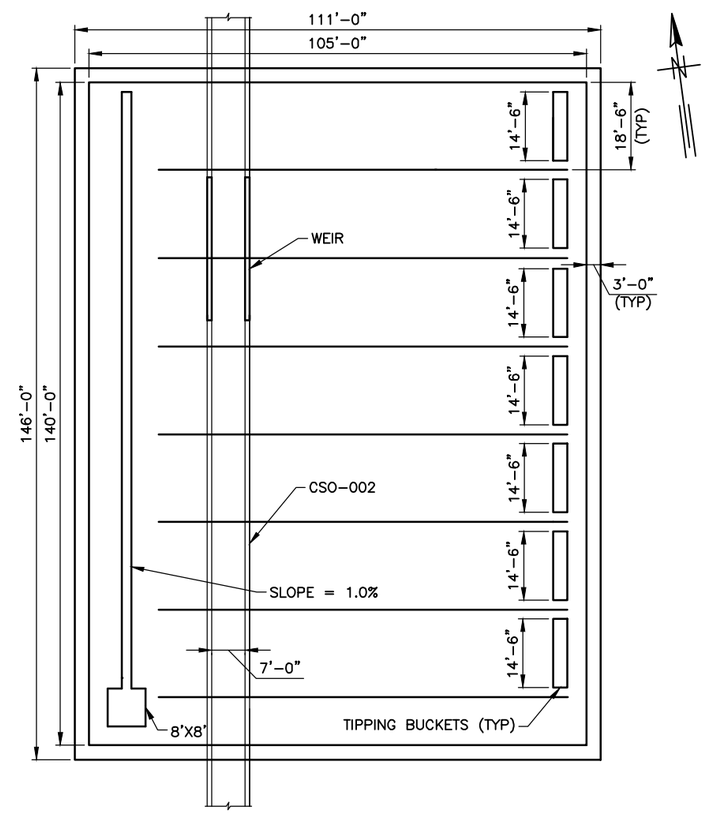

PLAN VIEW

32 0 32 FT
1/32"=1'-0"

ALTERNATIVE 2

GREELEY AND HANSEN

CITY OF ALEXANDRIA
CSO-002 STORAGE ALTERNATIVES
NOVEMBER 2015

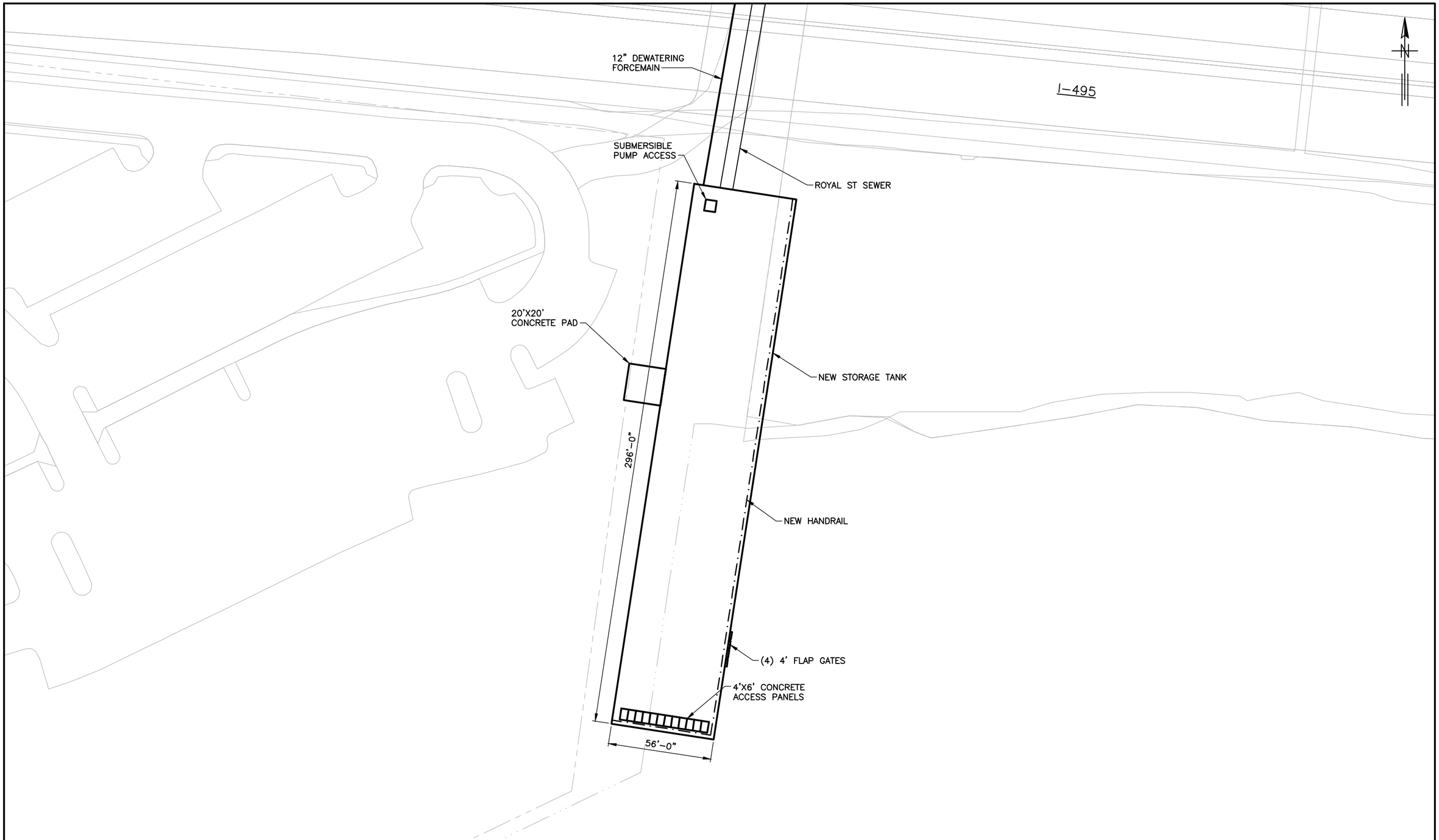

ALTERNATIVE 3

GREELEY AND HANSEN

CITY OF ALEXANDRIA
CSO-002 STORAGE ALTERNATIVES
NOVEMBER 2015

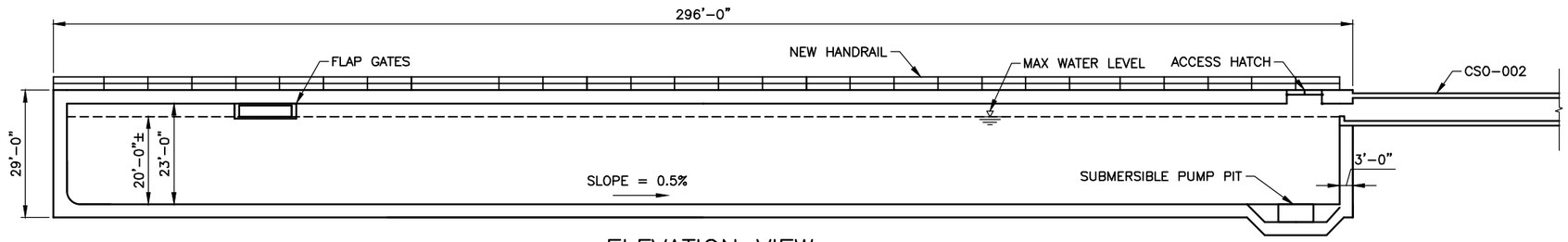

ELEVATION VIEW

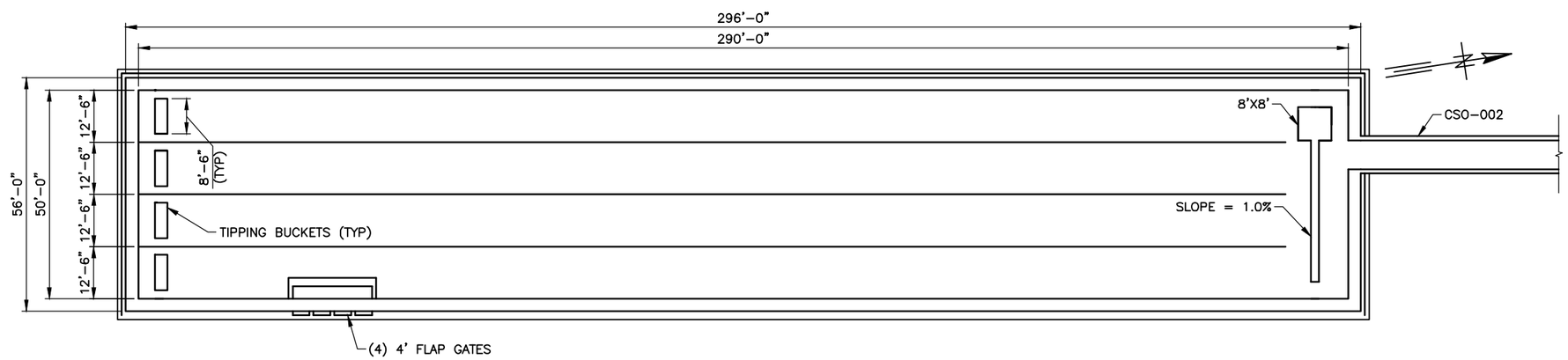

PLAN VIEW

32 0 32 FT
1/32"=1'-0"

ALTERNATIVE 3

GREELEY AND HANSEN

CITY OF ALEXANDRIA
CSO-002 STORAGE ALTERNATIVES
NOVEMBER 2015

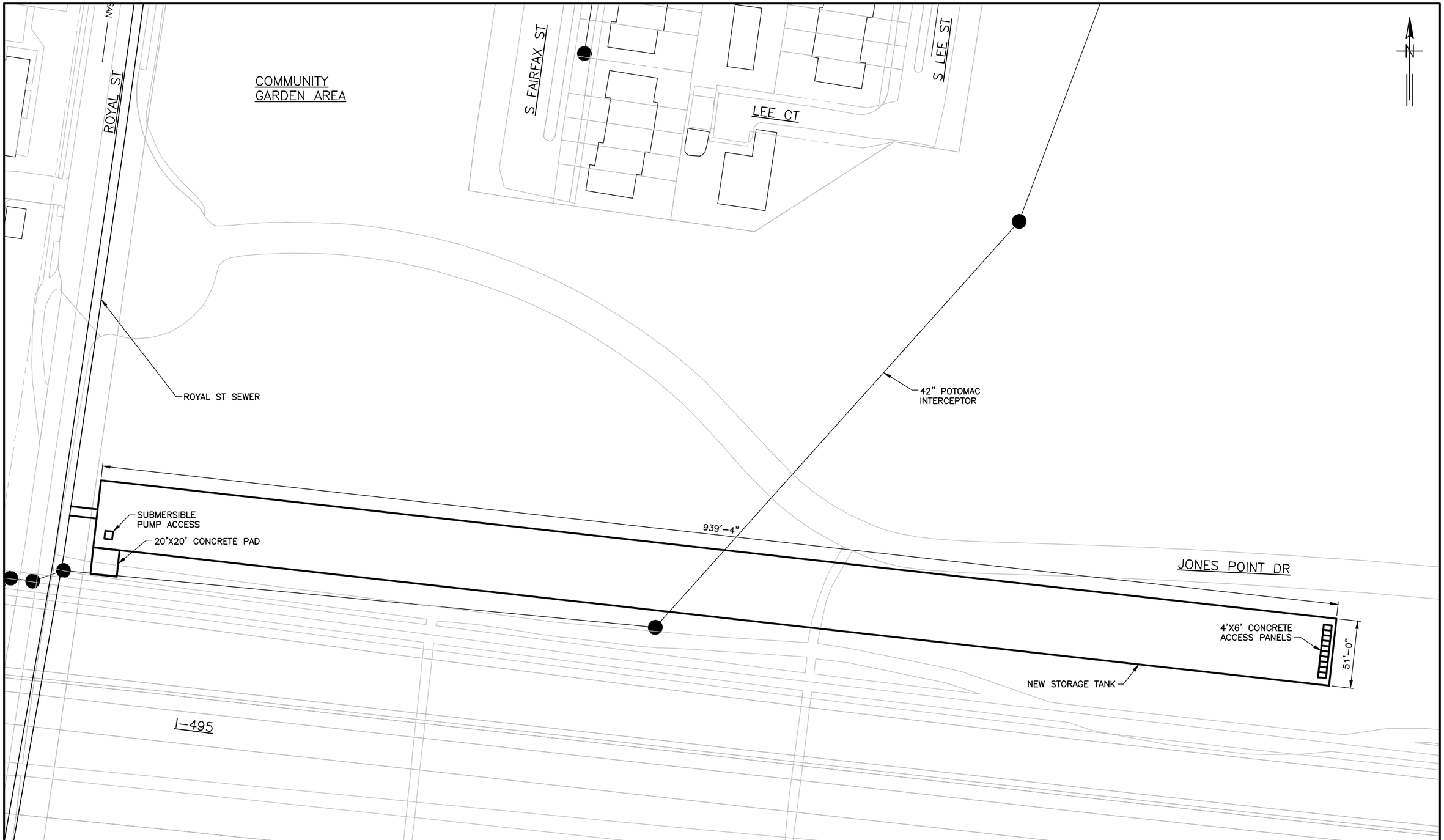

ALTERNATIVE 4

GREELEY AND HANSEN

CITY OF ALEXANDRIA
CSO-002 STORAGE ALTERNATIVES
NOVEMBER 2015

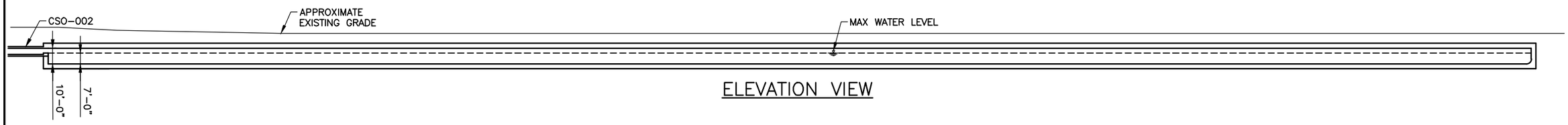

ELEVATION VIEW

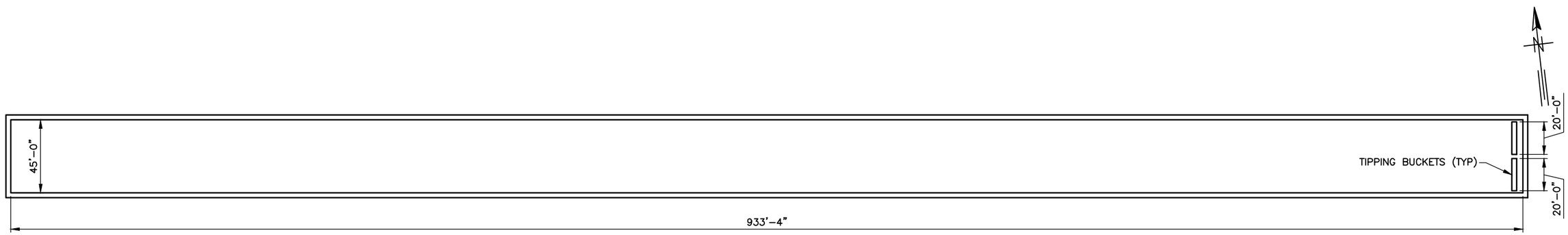

PLAN VIEW

64 0 64 FT
1/64"=1'-0"

ALTERNATIVE 4

GREELEY AND HANSEN

CITY OF ALEXANDRIA
CSO-002 STORAGE ALTERNATIVES
NOVEMBER 2015

Greeley and Hansen LLC
5301 Shawnee Road, Suite 400
Alexandria, VA 22312
571.581.3000
http://www.greeley-hansen.com/

GREELEY AND HANSEN